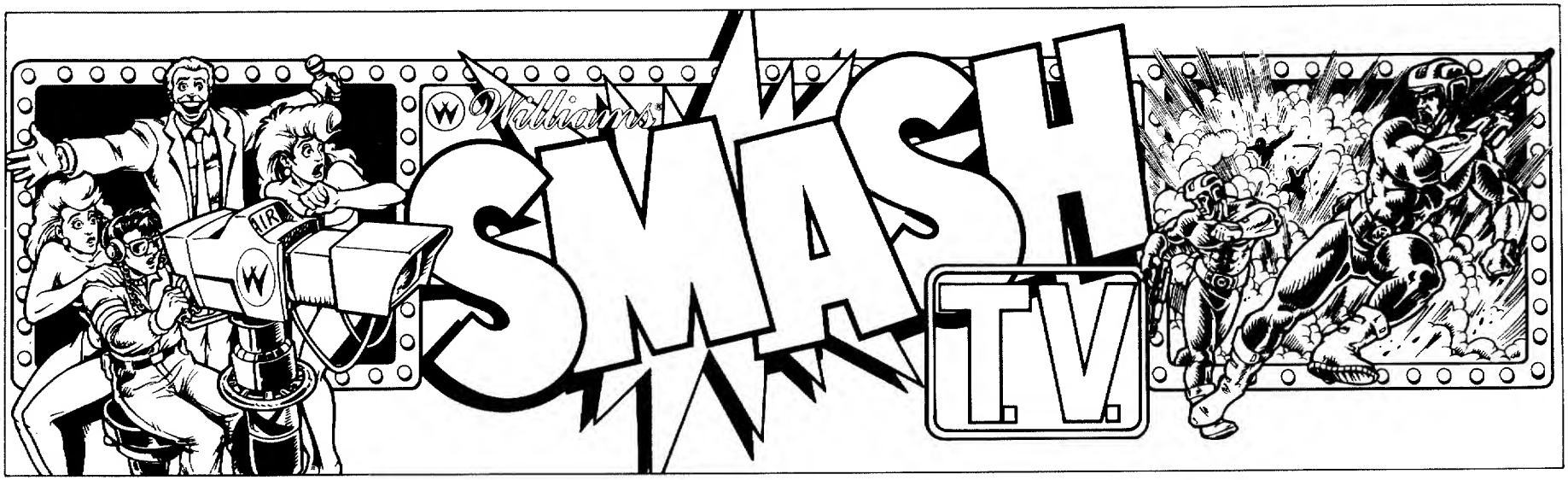

OPERATIONS MANUAL

including:

Game Operation & Adjustment
Game Testing & Problem Diagnosis
Parts Information
Reference Diagrams & Schematics

WILLIAMS ELECTRONICS GAMES, INC.
3401 N. California Avenue
Chicago, IL 60618

April 1990
16-3044-U1-101
25" Monitor
Game 3044-U1

910

The year is 1999

Television has adapted to the more violent nature of man.

The most popular form of television remains the game show.

One show in particular has dominated the ratings. That show is SMASH TV. The most violent game show of all time.

Two lucky contestants compete for cash and prizes. Each contestant is armed with an assortment of powerful weapons and sent into a closed arena.

The action takes place in front of a studio audience and is broadcast live via satellite around the world.

Be prepared.

The future is now.

You are the next lucky contestant!

SMASH TV GAME RULES:

1. *Move with LEFT joystick to avoid enemies and gather prizes (cash and game show gifts).*

2. *Fire weapons with RIGHT joystick and collect power-up icons for increased firepower.*

3. *Advance to next game arena when enemies are gone.*

TABLE OF CONTENTS

Section 1 Operation and Troubleshooting

Safety 1-2
Set-up Procedure
- Installation & Inspection 1-3
- Location Requirements 1-3
- Cabinet Assembly Diagram 1-4

Servicing 1-5
Game Features
- Starting-up 1-7
- Player Controls 1-7
- Control Panel Diagram 1-7

Game Operation
- Control Switches 1-8
- Control Switch Location Diagram 1-8

Game Adjustment & Diagnostics
- Starting-up 1-9
- Main Test Menu 1-9
- Diagnostic Tests 1-10
  - Switch Test 1-10
  - DIP Switch Test & Chart 1-11
  - CPU & Sound Tests 1-12
  - Monitor Patterns & Burn-In Tests 1-13
- Coin Bookkeeping 1-14
- Game Audits 1-14
- Game Adjustments 1-16
- Standard Pricing Chart 1-19
- Utilities 1-20

Troubleshooting 1-21

Section 2 Parts Information

Cabinet, Speaker, & Lamp Parts 2-2
PC Boards, Transformer, Control Panel, & Monitor 2-3
Cables, & Manuals 2-4
Audio Board 2-5
CPU Board 2-6
Power Supply 2-8

Section 3 Diagrams and Schematics

Audio Board Schematic 3-2
CPU Schematic 3-3
JAMMA Edge Connector Chart 3-19
Cabinet/Control Panel Wiring Diagram 3-20
Power Wiring Diagram 3-21
Interboard Wiring Diagram 3-22
Control Panel Wire Colors 3-23

SMASH TV

SECTION
one

Operation and Troubleshooting

Safety Notices

The following safety hints apply to all game operators and service personnel. Specific warnings and cautions will be found throughout this manual where they apply. We recommend that you read this page, and also all of Section 1, before preparing your game for play.

WARNINGS

AC POWER CONNECTION. Before connecting the game to the AC power source, verify that the "line voltage selection chart" jumper wires are installed correctly for the line voltage in your area. For details, refer to Section 3.

PROPERLY GROUND THE GAME. To avoid electrical shocks, do not plug in the game until it has been inspected and properly grounded. WILLIAMS games should only be plugged into a grounded 3-wire outlet. Shocks will also result, if the control panel is not properly grounded! After servicing any parts on the panel, assure that the ground wires are secure. Only then should you lock up the game.

DISCONNECT POWER DURING REPAIRS. To avoid electrical shock, disconnect the game from the AC power source before removing or repairing any part of the game. When removing or repairing the monitor, extra precautions must be taken to avoid electrical shock because high voltages may exist within the monitor circuitry and cathode ray tube (crt) even after power has been disconnected. Do not touch internal parts of the display with your hands or metal objects! Always discharge the crt: attach one end of a large, well-insulated, 20-kV jumper to ground. Momentarily touch the free end of the grounded jumper to the anode by sliding it under the anode cap. Wait two minutes and discharge the anode again.

USE THE PROPER FUSE. To avoid electrical shock, use the replacement fuse which is specified in the parts list for this game. The replacement fuse must match the original fuse in fuse type, voltage rating, and current rating.

HANDLE FLUORESCENT TUBE AND CRT WITH CARE. If you drop a fluorescent tube or CRT and it breaks, it will implode! Shattered glass can fly eight feet or more from the implosion.

CAUTION

PROPERLY ATTACH ALL CONNECTORS. *Make sure that the connectors on each printed circuit board (pcb) are properly connected. If they do not slip on easily, do not force them. A reversed connector may damage your game and void the warranty. All connectors are keyed to fit specific pins on each board.*

Setup Procedure

Installation and Inspection

1. Remove the game from its shipping carton, and inspect the exterior of the cabinet for any signs of damage. Remove the shipping cleats from the bottom of the cabinet.

2. Remove keys from the taped coin return slot (or attached to joystick). Unlock and open the coin and cash box doors. (Leg levellers and spare parts are stored in the cash box.)

3. Locate the four threaded holes on the bottom of the cabinet (one in each corner),and install one leg leveller (with its hex nut) in each hole.

4. Stand the cabinet upright and make certain that it is in a stable position. Level the cabinet.

5. Unscrew (or unlock) and remove the rear doors/panels of the cabinet. Inspect the interior for any signs of damage. Check all major assemblies to assure that they are mounted securely.

6. Refer to the game's cabinet wiring diagram (Section 3), and check to see that all cable connectors are correctly secured and firmly seated. DO NOT FORCE CONNECTORS. Watch for damaged connectors and avoid making reversed connections.

7. Line Voltage Selection. Your game is designed to work properly on the line voltage where you are located. Determine the value of your line voltage with a meter. Then, check the power input wires to the main power supply transformer on your game to be sure they are connected to taps which correspond to your local line voltage value. If necessary, reconnect the power input wires to the transformer in accordance with the Tranformer Chart in Secton 3.

If the line voltage in your area falls outside the upper or lower limits of the range of voltage inputs covered by the main powe supply transformer, DO NOT PLUG YOUR GAME IN until you have contacted your distributor or the WILLIAMS Service Department and obtained a solution to the problem. Otherwise, you could damage your game.

8. Lay the line cord (connected to the Power Chassis) in the slot along the bottom edge of the lower rear cabinet door/panel. Install the rear cabinet doors/panels and screw (lock) them securely. Close and lock the front coin and cash box doors.

9. Connect the line cord to a grounded (3-terminal) AC wall outlet.

10. Switch ON the game, using the ON/OFF switch located on the upper left rear of the cabinet, to verify proper operation.

GAME LOCATION REQUIREMENTS

Power
Domestic 115V @ 60 Hz
Foreign 230V @ 50 Hz

Temp.
32° F to 100° F
(0° C to 38° C)

Humidity
Not to exceed 95% relative.

25" Cabinet (Front View)

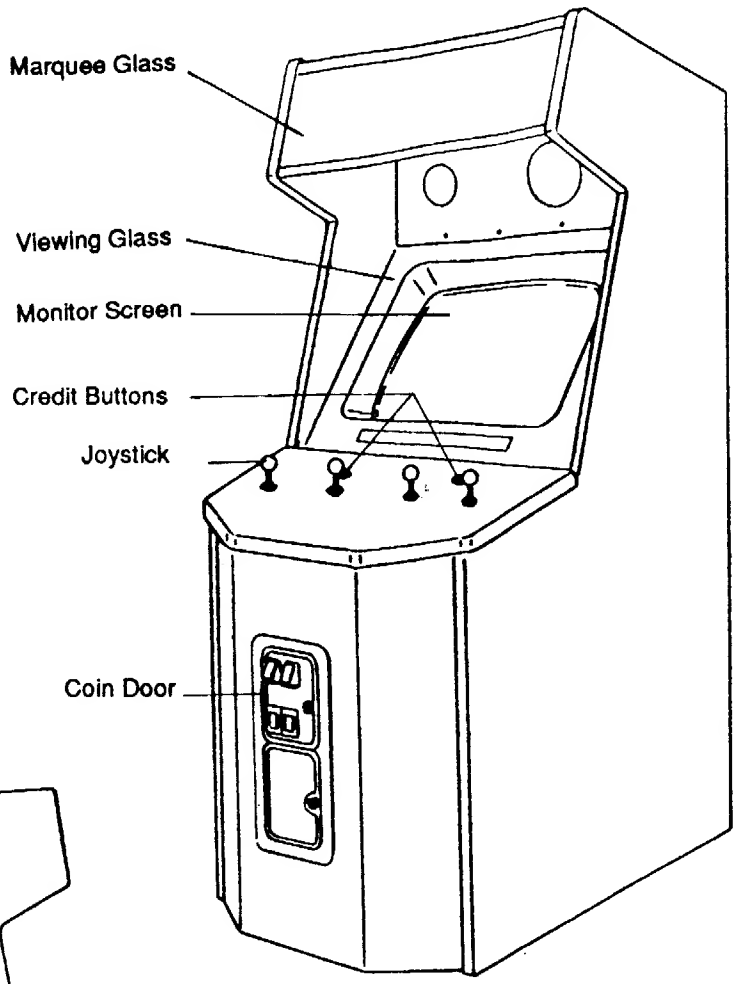

25" Cabinet (Rear View)

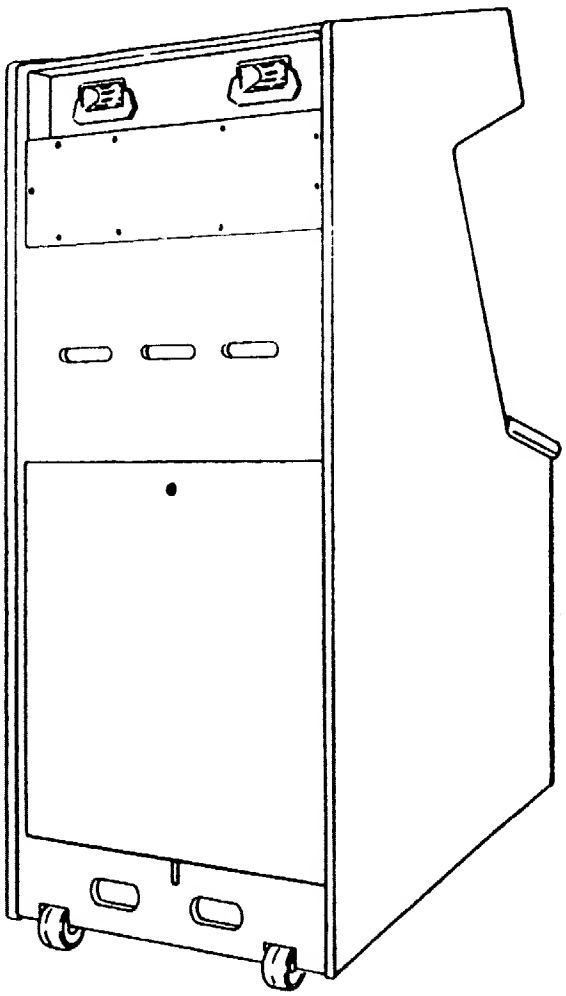

Servicing

■ Servicing the Control Panel

Switch OFF power to the game. The control panel is held in place by four latches (located on the left and right sides of the cabinet) which provide constant pressure on the strikes. The latches can be reached through the coin door opening. To release the latches, lift the latch handle and unhook the wire fasteners. Carefully use the joysticks to lift the control panel. Rest the panel on its support bracket, while working on it. To reinstall the control panel, check for proper cable connections, including the ground strap, and use the joysticks to lower it into position, avoiding pinched wires. Reclamp the latches.

> ***NOTE***
> To remove the control panel for bench servicing, release the latches and lift the control panel, until it rests on its support bracket. Disconnect the cables and the ground strap. Lift the control panel out of the game cabinet.

■ Removal of Viewing Glass

Switch off power to the game, and open the control panel. Unscrew the four nuts at the bottom of the glass and remove the protective black plastic strip. Carefully lift the glass from its bottom groove and lift it clear of the cabinet.

■ Removal of Monitor Bezel

Switch off power to the game, and remove the viewing glass. Remove the bezel securing screws to free the monitor bezel.

■ Monitor Replacement

We recommend that you read the WARNINGS section thoroughly before beginning this procedure.

Switch off power to the game. Open the upper rear door/panel. Remove the viewing glass and the monitor bezel. Completely disconnect the monitor from all of its cabling, including its chassis ground strap. Remove the four bolts securing the monitor's mounting flanges to its mounting panel. Pull the monitor carefully from the cabinet front.

CAUTION

The monitor DOES NOT contain an isolation transformer in its chassis (it is mounted instead in the Power Chassis Assembly located on the floor of the cabinet). When servicing the monitor on a test bench, YOU MUST ISOLATE THE MONITOR FROM THE LINE VOLTAGE WITH AN ISOLATION TRANSFORMER.

CAUTION

While removing the four bolts, firmly support the monitor from the front of the crt so that it will not slip.

WARNING

If you drop a fluorescent tube and it breaks, it will implode! Use care in handling.

■ Removal of the Marquee Glass

Switch off power to the game. Remove the screws in the black plastic strip on top of the cabinet. Remove the strip and carefully lift the glass. Store the glass carefully to prevent damage.

The fluorescent tube is now accessible for replacement. Grasp the tube, give it a quarter turn, and remove it from its socket. Carefully place a new tube into the socket, and turn to reinstall.

■ Removal of the Fluorescent Light Assembly

Switch off power to the game. Remove the marquee glass. Disconnect the fluorescent light assembly from its power cable. Remove the screws fastening the assembly to the cabinet and lift out the assembly.

■ Removal of the Speakers

Switch off power to the game. Remove the upper rear cabinet door/panel, taking care to *not* damage the speaker enclosure seals. Disconnect the speakers from their cabling. Remove the nuts on the speaker mounting bolts. Remove the speakers. Because the speakers are mounted in an acoustical enclosure, carefully reinstall the seals upon completing any task in the speaker enclosure.

■ Volume Control, Test/Diagnostics Switch, and Service Credit Switch

Open the coin door to locate the game's volume control and Diagnostic switches on the small panel atop the cash box cover. The Volume Control is the white knob on left end of the panel. Turning the knob clockwise increases the volume. The upper right switch on the bracket is the Test/Diagnostics Switch that enables activating the game's test mode. The lower right switch is the Service Credit Switch, which allows adding credits to a game for service testing without affecting the game's bookkeeping total.

Game Features

Starting Up

Switch on power to the game. A "rug" pattern appears on the crt screen. When the "rug" pattern ends, the screen shows CHECKING SCRATCH RAMS, and then CHECKING ROMS. The next screen shows SMASH TV REVISION LEVEL, CMOS TEST OK and the COIN SETTING. The game then moves to the attract mode. After the proper coinage has been inserted, the game exits the attract mode and enters the play mode.

SMASH TV is a one or two player game.

Player Controls

- Each Credit button allows (1 or 2) players to begin play or continue play.
- Left Joysticks enable players to move through arenas.
- Right Joysticks enable players to fire on enemies in arenas.

NOTE

SMASH TV will operate in the Test Mode, when the Test Switch (on the cash box cover) is closed *or* DIP Switch Bank #2 Switch #8 is closed.

When an error is detected during Start-up Tests, game start-up does not progress, and an error message appears on the screen.

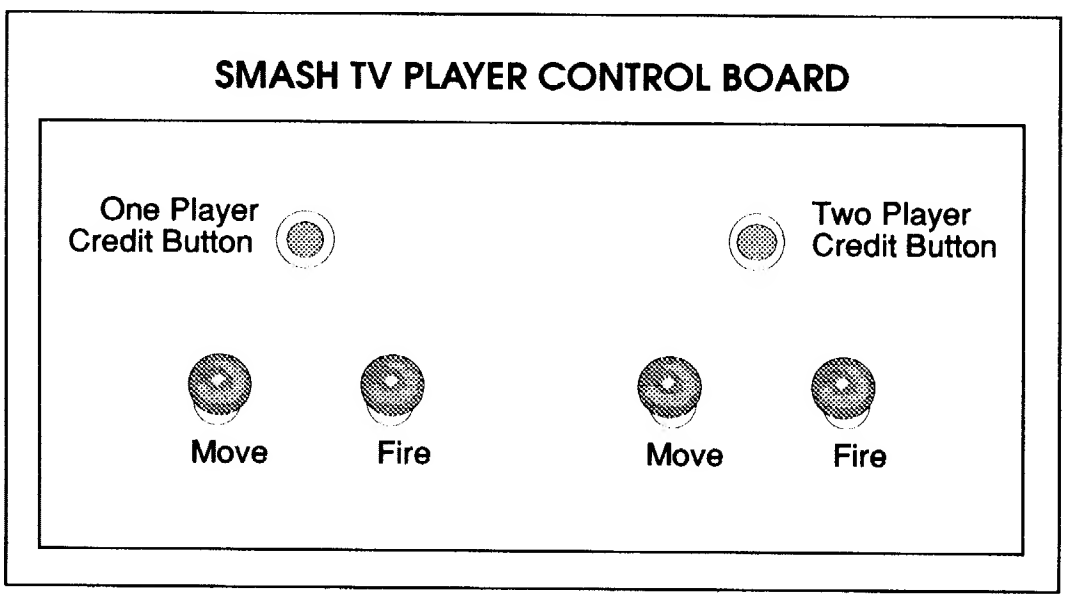

Game Operation

SMASH TV is a one or two player video game with a color monitor. From the player's perspective, the game has two modes of operation: Ready-to-Play and Play. For the owner/operator, the game has an additional mode of operation called Game Diagnostics and Adjustments.

Control Switches

- The **COIN DOOR SLAM TILT SWITCH** detects any forceful vibrations against the Coin Door. This eliminates pounding for free games.
- The **VOLUME CONTROL** allows increasing or decreasing the volume level of the game music and speech. For greater profits, set your game's volume level at its maximum.
- The **TEST/DIAGNOSTICS SWITCH** allows you to enter into the game's Diagnostic mode. Move the Test Switch to the left, then back to the right to enter the Diagnostics Mode. To exit this mode, select EXIT TO GAME OVER from the Diagnostics main menu.
- The **SERVICE CREDIT SWITCH** is a special feature switch that allots credit without affecting the game's bookkeeping total.
- The **POWER INTERLOCK SWITCH** is a safety switch that ensures power to the game is turned off during servicing. This switch is located inside the lower rear door/panel.

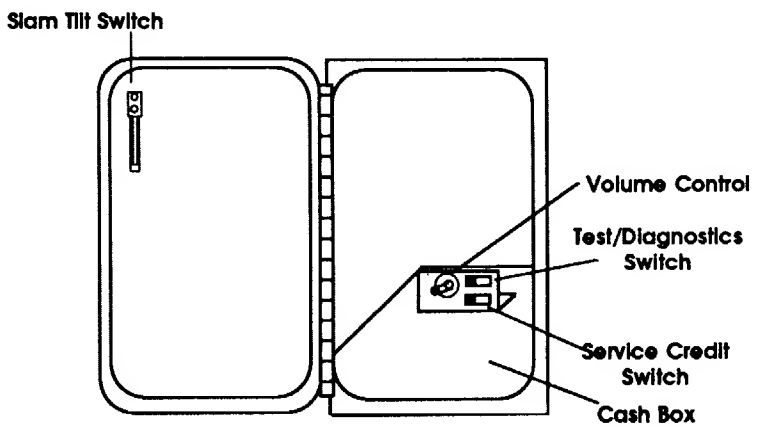

Control Switch Locations

Game Audits, Adjustments & Diagnostics

Operation

All SMASH TV Game Audits, Adjustments, and Diagnostics are options of the Main Test Menu. Each option, in turn, has its own menu, listing several choices that you may act upon as desired.

Move the Test Switch (on the cashbox lid panel) left, then back to the right to activate the SMASH TV Adjustments and Diagnostics. Main Test Menu (shown below) then appears. Game adjustments, bookkeeping, and diagnostics are all accessible from this menu.

Move the left joystick up or down to cycle through the menu options. Notice that the options are highlighted in sequence. Selecting a desired option requires it to be highlighted. To activate the selected option,move the right joystick.

The Main Test Menu lists six options.

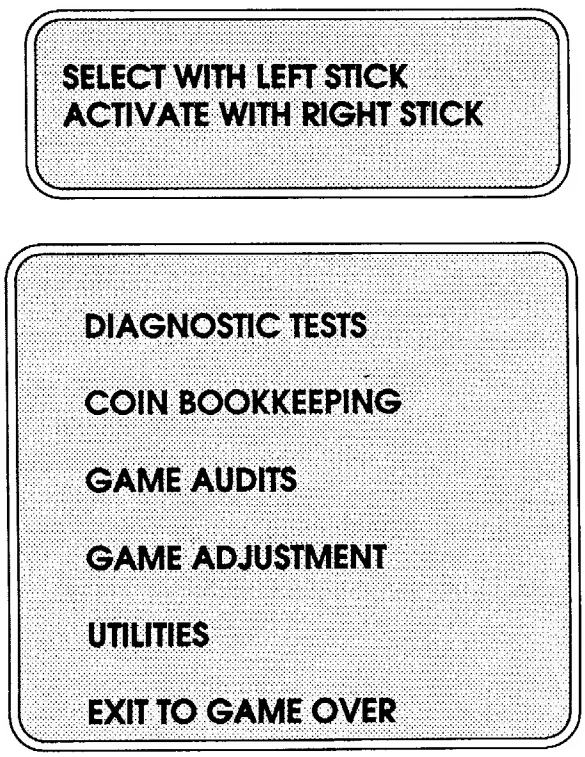

Main Test Menu

DIAGNOSTIC TESTS

To enter the Diagnostic Tests from the Main Test Menu, move the left joystick to select (highlight) the Diagnostic Test option, and move the right joystick to activate the option.
The Diagnostic Tests Menu lists seven options.

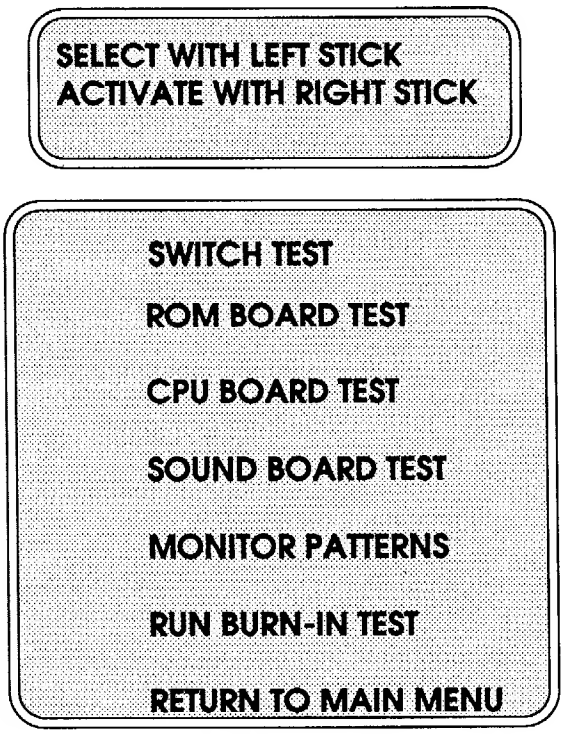

Diagnostic Test Menu

Switch Test

The Switch Test allows the operator to test the switches on the control panel and the coin door.

Select the Switch Test by using the leftjoystick to highlight the Switch Test option; then, move the right joystick to activate it. The top of the screen shows a layout of the control panel and the bottom of the screen lists the coin door switches. Pressing a switch causes the corresponding switch location on the screen to light. Release the switch and the screen returns to normal.

Select the RETURN TO MAIN MENU option to return to the Diagnostic Test Menu.

DIP SWITCH TEST

Please Note: Dip Switch information will be provided when available.

NOTE

As soon as a faulty chip is detected, the CPU Test stops. The remaining chips are not tested.

CPU Board Test

The CPU Board Test (much like the Start-up Test) allows the operator to check the RAMs and ROMs.

Move any joystick to select the CPU Board Test; then, press any control panel button to activate the automatic test of the CPU Board's RAMs and ROMs. When this test is activated, a "rug" pattern appears on the screen. The screen then changes to show the layout of the RAMs, and ROMs on the CPU. Any chip that is shown as black with a white outline is part of the CPU and should turn either red or green during the CPU Test. Any chip that is shown as gray with a white outline is not installed in the game. During the test, chips are good, if they turn green; they are faulty, if they turn red.

Press any control panel button to return to the Diagnostic Test Menu.

Sound Board Test

The Sound Test allows listening to some of the sounds that SMASH TV is capable of producing. This test also emits a tone for each fault that is detected.

Move any joystick to select the Sound Board Test; then, press any control panel button to activate the test.

Monitor Patterns

The Monitor Patterns Test provides a menu for testing the monitor.

Move the left joystick to select a test; move the right joystick to activate the test.

Monitor Pattern Menu

The **RED, GREEN**, and **BLUE SCREEN** tests fill the screen with either red, green or blue.
The **COLOR BARS** test fills the screen with several gradiated colors to help with red, green and, blue level adjustments. Each color should appear sharp and clear.
The **CROSSHATCH PATTERNS** test fills the screen with a grid and a series of dots. The grid and the dots should be clear. The dots should appear round.

If any of the Monitor Pattern Tests shows a need for adjustment, use the proper white knobs on the Monitor Board.

Move right joystick to return to the Monitor Patterns Menu. From this menu, select RETURN TO MAIN MENU with left joystick and activate with right joystick.

NOTE:

SMASH TV provides front-mounted Monitor Board controls. These controls are accessible within the control panel opening beneath the monitor.

Burn-in Test

The Burn-in Test continually repeats the CPU Board Test. Move any joystick to select the Burn-in Test; then, press any button to activate the test. When the Burn-in Test detects an error, the test stops and displays an error message on the screen. The third page of the Audit Table specifies the number of Burn-in cycles successfully completed. Use this test to find intermittent CPU problems.

To exit this test, switch off the game; then, switch it on again.

COIN BOOKKEEPING

To enter the Coin Bookkeeping from the Main Test Menu, move the left joystick to select the Coin Bookkeeping option; then, move the right joystick to activate it.

The Coin Bookkeeping Table records the coinbox totals and game play counters. The left side of the table names the bookkeeping item; the right side shows the number of coins, credits, or plays for each item.

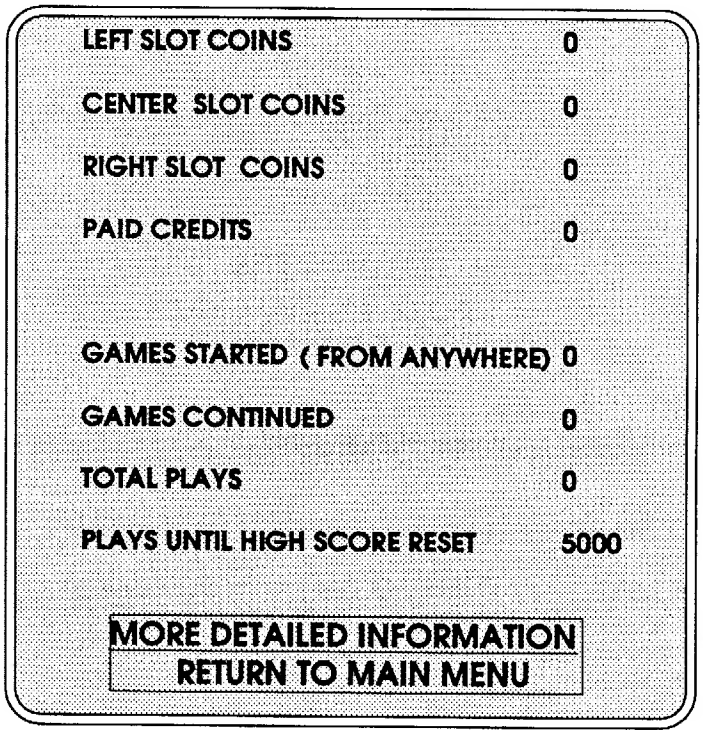

Coin Bookkeeping Table

To exit Coin Bookkeeping, move the left joystick to select RETURN TO MAIN MENU; then, move right joystick to activate it.

GAME AUDITS

To enter Game Audits from the Main Test Menu, move the left joystick to select the Game Audits option; then, move the right joystick to activate it. To advance to the next (or return to the previous) page of the Game Audit Table, move any joystick to select either "Next Audit Page", or "Previous Audit Page"; then, press any control panel button to change the page.

The Game Audits Table records the game play statistics. The left side of the table names the Audit item; the right side shows the amount of play.

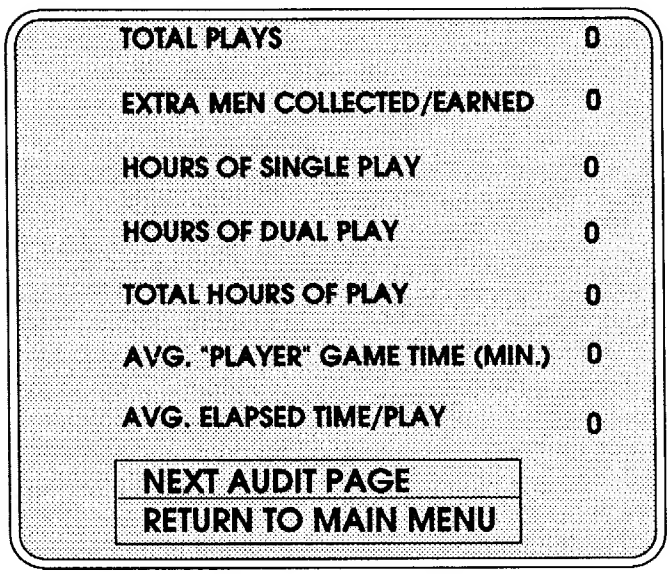

PAGE 1 OF AUDIT TABLE

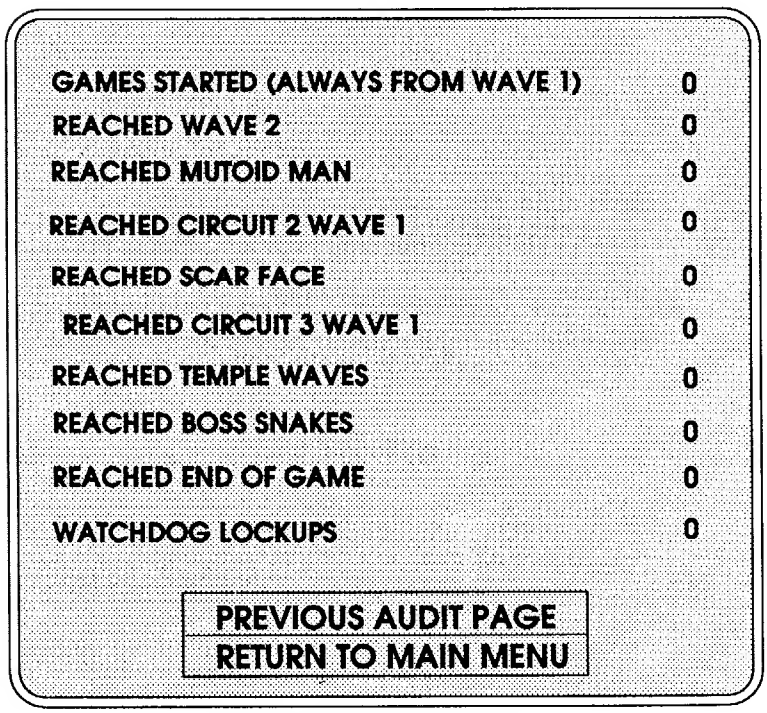

PAGE 2 OF AUDIT TABLE

To exit the Game Audit Table , move the left joystick to select RETURN TO MAIN MENU; then, move right joystick to activate it.

GAME ADJUSTMENTS

Move the left joystick to select the Game Adjustment option on the Main Test Menu; then,move the right joystick to activate it.

The Game Adjustments option allows the owner/operator to change the Game Pricing and Game Difficulty.

The Game Adjustment Menu offers several choices. Each choice has its own menu. Move the left joystick to select your choice to be changed from the Game Adjustments Menu; then, move right joystick to activate that choice. On the next menu screen, move the left joystick to select the item you wish to modify; then, move the right to activate that item. If the activated item only provides a setting choice, move the left joystick to change the current setting to the desired value; then, move the right joystick to lock in the desired value. Moving the joystick up increases the setting value shown on the screen. Moving the joystick down causes the value shown on the screen to decrease.

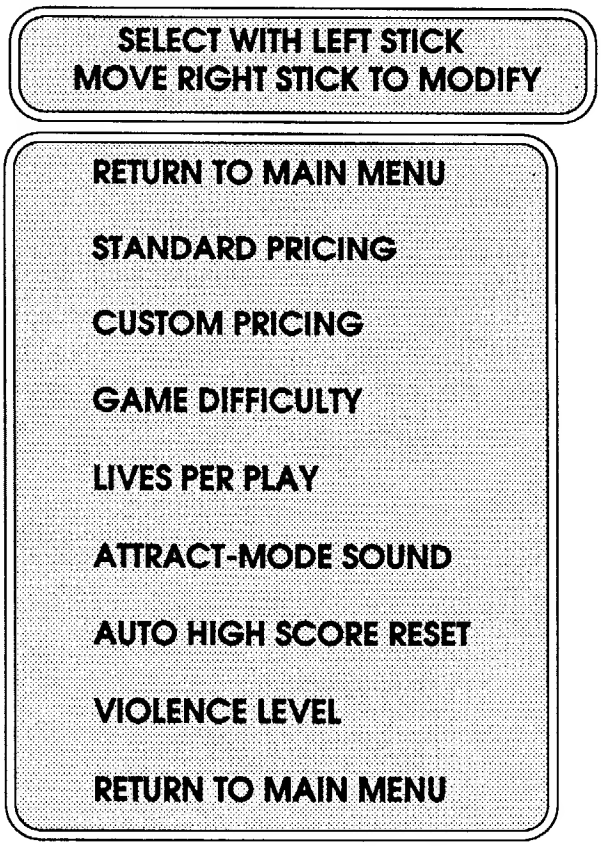

Game Adjustment Menu

Standard Pricing

Standard Pricing allows the operator to choose any of the "Standard" selections for the Standard Pricing Table. Standard Pricing *cannot* be installed when either Custom or DIP Switch Pricing is in effect.

NOTE

The SMASH TV Standard Pricing Table is on page 1-19.

Move the right joystick to return to the Game Adjustments Menu.

Custom Pricing

Custom Pricing allows the operator to install pricing other than that of the Standard Pricing Table. Custom Pricing also allows the operator to select the maximum amount of credits per game, the amount of credits required to start a game, and the amount or credits required to continue a game. Custom Pricing *cannot* be installed when DIP Switch Pricing is in effect.

Move the right joystick to return to the Game Adjustments Menu.

Game Difficulty

Game Difficulty allows the operator to select the difficulty level of the game. The range of this setting is Easiest (1) to Hardest (10).

Move the right joystick to return to the Game Adjustments Menu.

Lives per Play

Lives per Play allows the operator to select the number of lives a player receives each time a game is started or continued.

Move the right joystick to return to the Game Adjustments Menu.

Attract Mode Sound

Attract Mode Sounds allows the operator to determine if the game has sound during the Attract Mode.

Move the right joystick to return to the Game Adjustments Menu.

Auto High Score Reset

Auto High Score Reset allows the operator to determine how many plays must occur before the all time high scores are automatically reset to factory settings.

Move the right joystick to return to the Game Adjustments Menu.

Violence Level

Allows the operator to determine the Volence Level of the game.

Move the right joystick to return to the Game Adjustments Menu.

To return to the Main Test Menu, move the left joystick to select RETURN TO MAIN MENU; then, move the right joystick to activate.

SMASH TV STANDARD PRICING TABLE

NAME	SETTING	LEFT CHUTE	RIGHT CHUTE
USA 1	1/25¢	25¢	25¢
GERMAN 1	1/1 DM 6/5 DM	1 DM	5 DM
FRANCE 1	2/5 F 5/10 F	5 F	10 F

UTILITIES

On the MainTest Menu, move the left joystick to select the Utilities option; then, move the right joystick to activate it.

The Utilities option allows the owner/operator to clear the game's bookkeeping memory and to install a custom message.

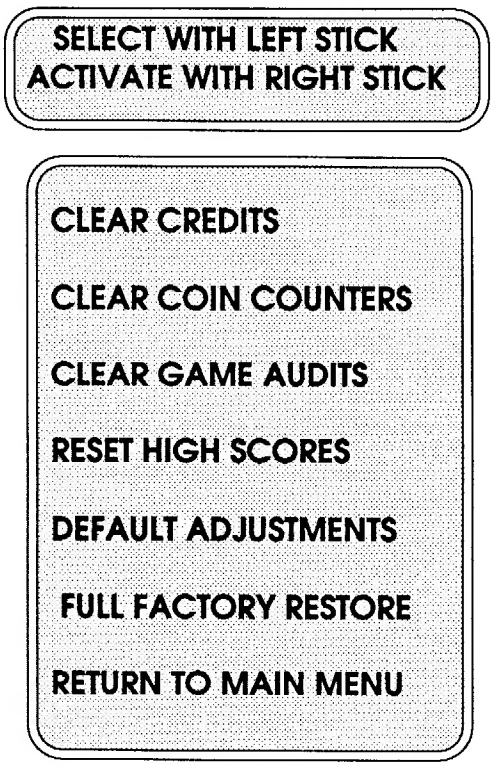

Utilities Menu

Move the left joystick to select an item from the Utilities Menu; then, move the right joystick to activate that item. After an item has been activated, you are given the option of resetting the item or not. For example;

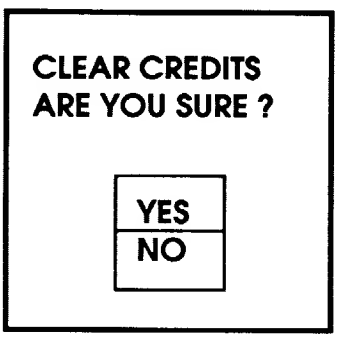

Move the left joystick to choose YES or NO; then, move the right joystick to lock in your choice and to return to the Utilities Menu.

To exit Utilities, move the left joystick to select RETURN TO MAIN MENU; then,move the right joystick to activate it.

Troubleshooting

Problem	Possible Solution
NO PICTURE OR DISTORTED PICTURE.	Check for faulty video board or monitor. Check for disconnected video signal cable.
TURN GAME ON & NOTHING HAPPENS	Check line fuse. Check for +5V dc at pins C, D, 3, and 4 of the JAMMA Connector.
NO SOUND	Check the speaker and speaker connection to pins L and 10 on JAMMA Connector. Check volume control setting. Check for +12V dc at pins F and 6 on the JAMMA Connector. Check interboard wiring from CPU Board to Sound Board.
NO GENERAL ILLUMINATION	Check the 1A., S-B fuse on the cabinet wall above the coin box.
MOVE JOYSTICK, BUT PLAYER DOES NOT MOVE OR FIRE	Check for open wires between Joystick and CPU Board. Check for contamination on joystick switch contacts and CPU Board pins. Check for proper ground.
PRESS **START BUTTON** AND NOTHING HAPPENS	Check for open wires between button and CPU Board. Check for contamination on CPU Board pins or button switch blade contacts. Check for proper ground.
NO CREDIT GIVEN WHEN COINS ARE INSERTED	Check DIP switch coin setting. Check for contamination on coin switch contacts. Check for an open wire between Coin Switch 1 and pin 16 on JAMMA Connector or Coin Switch 2 and pin T of JAMMA Connector.
TOO MANY CREDITS FOR NUMBER OF COINS INSERTED	Check Game Pricing setting. Check for a short between pins T & 16 on JAMMA Connector.
GAME STAYS IN THE TEST MODE.	Check that the Test Switch in the coin door and the Test Switch (Position 8) on DIP Switch 2 are set to Off.

SEE NOTE

NOTE: Due to the physical playing nature of SMASH TV, joysticks should be periodically checked and adjusted as necessary.

SMASH TV

SECTION

two

Parts Information

Cabinet Hardware

Cabinet Assembly	A-11-948-3044-U1
Caster Wheel Assembly	B-13086
Control Panel Assembly	D-13570
Leg Leveler Plate	01-9155
Leg Adjuster	08-7377
Wood Cabinet	11-948
Back Door Assembly	B-13574
Lock Retainer	01-7264
Upper Door Cam Lock	01-8989
Rear Wood Door	11-934
Door Cam Lock	20-6542-TB
Line Voltage Cable Assembly	C-12773-4
Mtg Plt Toggle Assembly	A-9958
Interlock Spring Brkt. Assy	B-12907
Line Voltage Cable	H-13555
Protective Cap	17-1038-2
Toggle Switch, 227V,15A.	5640-10932-00
Interlock Cheat Switch	5643-09556-00
Over/Under Coin Door	D-13250
Test Switch	A-13115
Coin Door Cable	H-13215
Coin Door USA	09-20000-V-1
12 pin "Z" Header	5791-12235-12
Speaker Grille	31-1554-3044-U
Test Switch Bracket	01-9383
Marquee Retainer	03-8252-2
Lock Lamp	03-8327
Glass Edge Channel	03-8358
Wood Speaker Door	11-935
Wood Control Panel	11-950
Toggle Latch	20-9347
SMASH TV Marquee	31-1551-3044-U1
Glass CRT Cover	31-1552-3044-U1

Speakers

Piezo Speaker Assembly	B-13587-1
4" Piezo Speaker, 50W	5555-12068-00
6" Round Speaker, 8ohm, 20W	5555-12015-00

Fluorescent Lamp Parts

Fluorescent Housing & Bracket	C-12679
Housing Mounting Brkt	01-9146
Light Fixture	20-9590
18" Fluorescent Bulb, 15 W	24-8809

PC Boards

Y-Unit CPU Assembly	C-13234-3044
Power Supply Assembly	C-13253-1
Audio Sound Board Assembly	D-11581-3044

Transformer Assembly

Power Pack Assembly	D-13252
Line Cord Assembly	A-13340
Power Transformer	A-13771
Power Pack Chassi Assy	C-13251
Power Pack Jumper Cable	H-13265
Line Filter Jumper Cable	H-13344
Transformer Jumper Cable	H-13378
Varistor, 130V, 10J	5017-09044-00
Line Filter, 5Amp	5102-08895-00
Fuse, SB3A, 125V	5731-08633-00
Fuse Holder, Panel	5733-10358-00

Control Panel

Control Panel Assembly	D-13570
Control Panel Plate Assy	C-13560
White Button Assembly	C-9214-5
Control Panel Bracket	01-9651
Wood Control Panel	11-950
5/8 Palnut	20-9222
8 Way Red Joystick	20-9319-1
Screened Overlay	31-1547-3044

Monitor

Monitor 25"	5675-12621-00

Cables

Video Sound/Power Cable	H-10217-4
Sound Board Jumper Cable	H-12758
Speaker Cable	H-13213
Coin Door Cable	H-13215
Power Pack Jumper Cable	H-13265
Line Filter Jumper Cable	H-13344
Transformer Jumper Cable	H-13378
Main Harness Cable	H-13583
Line Voltage Cable	H-13555
Control Panel Cable	H-13584
Sound/ Power Speaker Cable	H-13257
20 pin Ribbon Cable	5795-10937-18

Manuals

Monitor Manual	16-3000-103
Instruction Manual	16-3044-U1-101

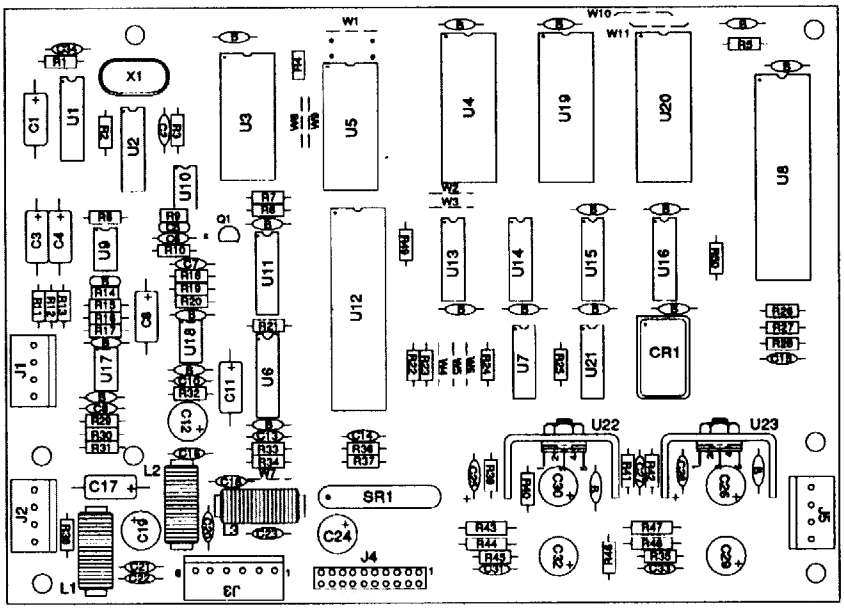

Audio Board Assembly

p/n D-11581-3044

Part Number	Ckt Designator	Description
5766-12130-00		Bare P. C. Board
5371-11087-00	U1	IC, D/A Conv, YM3012
a) 5700-09006-00		Socket, IC, 16-pin (U1)
5370-11086-00	U3	IC, Sound Processor, YM2151
a) 5700-09004-00		Socket, IC, 24-pin (U3)
5400-10320-00	U8	IC, µProcessor, MC68B09E
a) 5700-08985-00		Socket, IC, 40-pin (U8)
A-5343-3044-3	U4	IC, Audio ROM 1
A-5343-3044-4	U19	IC, Audio ROM 2
A-5343-3044-5	U20	IC, Audio ROM 3
a) 5700-10176-00		Socket, IC, 28-pin (U4, U19)
5371-09152-00	U11	IC, D/A Convtr, MC1408
5430-10322-00	U12	IC, PIA, MC68B21
5340-10139-00	U5	IC, RAM/S 5516-2 2Kx8
5281-09487-00	U16	IC, Dual D Flipflop, 74LS74
5281-10043-00	U13	IC, 74LS175
5281-09235-00	U21	IC,Triple NAND, 74LS10
5370-09321-00	U9, U10, U17, U18	IC, Op Amp, MC1458
5281-09215-00	U2	IC, Hex Inv, 74LS04
5281-09246-00	U14	IC, 2-4 Dec, 74LS139
5281-09745-00	U15	IC, Dual Mux, 74LS138
5370-09156-00	U22, U23	IC, Audio Amp, TDA2002
a) 5705-09199-00		Heatsink, #6030B
b) 4006-01003-06		Mach. Screw, 6-32 x 3/8
c) 4406-01117-00		Nut, 6-32 Hex.
d) 4703-00007-00		Lockwasher, #6 Ext.
5160-10269-00	Q1	Transistor, 2N3904, NPN
5060-10396-00	SP1	SIP 4.7K & 470pfd, 8R8C
5010-09161-00	R44, R48	Resistor, 1.0Ω, 1/2w, 5%
5010-09161-00	R35, R45	Resistor, 2.2Ω, 1/4w, 5%
5010-09361-00	R43, R46, R47	Resistor, 220Ω, 1/2w, 5%
5010-09358-00	R41, R42	Resistor, 1K, 1/4w, 5%
5010-08998-00	R2, R3,	Resistor, 2.2K, 1/4w, 5%
5010-08983-00	R7-R9	Resistor, 3.3K, 1/4w, 5%
5010-08991-00	R1, R4, R5, R11, R25 - R28, R33, R36, R37, R49, R50	Resistor, 4.7K, 1/4w, 5%

Part Number	Ckt Designator	Description
5010-10985-00	R14, R15	Resistor, 20K, 1/4w, 5%
5010-09034-00	R22-R24, R17, R34	Resistor, 10K, 1/4w, 5%
5010-09324-00	R6, R19, R20, R21	Resistor, 27K, 1/4w, 5%
5010-09162-00	R39	Resistor, 100K, 1/4w, 5%
5010-09331-00	R16	Resistor, 13K, 1/4W, 5%
5010-08772-00	R18	Resistor, 15KΩ, 1/4W, 5%
5010-08824-00	R32	Resistor, 43KΩ, 1/4W, 5%
5010-08848-00	R31	Resistor, 220KΩ, 1/4W, 5%
5010-08991-00	R12	Resistor, 4.7KΩ, 1/4W, 5%
5010-09219-00	R38	Resistor, 8.2K, 1/4W, 5%
5010-10258-00	R40	Resistor, 1M, 1/4w, 5%
5010-09179-00	R10	Resistor, 3.3M, 1/4w, 5%
5010-09333-00	R29	Resistor, 180KΩ, 1/4W, 5%
5010-09342-00	R30	Resistor, 36KΩ, 1/4W, 5%
5010-09534-00	W9	Resistor, 0Ω, 1/4w, 5%
5040-09343-00	C1, C3, C4, C8	Capacitor, 10µfd, 20v, ±20%
5040-10974-00	C12, C19, C24	Capacitor, 100µfd, 35v
5040-09776-00	C26, C30	Capacitor, 470µfd, 16v; +50, -10%
5040-12006-00	C29, C32	Capacitor, 1000µfd, 16v, 20%
5041-09243-00	C25, C28	Capacitor, 10µfd, 10v,±10%
5043-08980-00	C5, B (17)*	Capacitor, 0.01µfd, 50v,+80, -20%
5043-08996-00	C31, C33	Capacitor, 0.1µfd, 50v, ±20%
5043-09065-00	C13 - C15	Capacitor, 470 pfd, 50v, ±20%
5043-09492-00	C2, C34	Capacitor, 100 pfd, 50v, ±10%
5043-09844-00	C6	Capacitor, 47 pfd, 50v, ±20%
5043-09845-00	C16, C18, C20 - C23, C27	Capacitor, 1000 pfd, 50v, ±20%
5520-09020-00	X1	Crystal, 3.58 MHz
5521-10931-00	CR1	Oscillator, 8 MHz
5551-09822-00	L1 - L3	Inductor, 4.7 µH, 3A
5791-09437-00	J4	Connector, 20 pin, (Hdr), Rib. Cbl
5791-10862-04	J1, J2, J5	Connector, 4 pin (Hdr)
5791-10862-06	J3	Connector, 6 pin (Hdr)
16-8850-250		P.C.B. I.D. Label
20-9229		Thermal Compound

Notes: *17 capacitors (shown on diagram with "B" symbol) provide +5VDC filtering for ICs.
All capacitors are ceramic, 50v, axial, unless otherwise noted.
All resistors are 5%, 1/4w, Carbon Film, unless otherwise noted.

Y-UNIT CPU BOARD

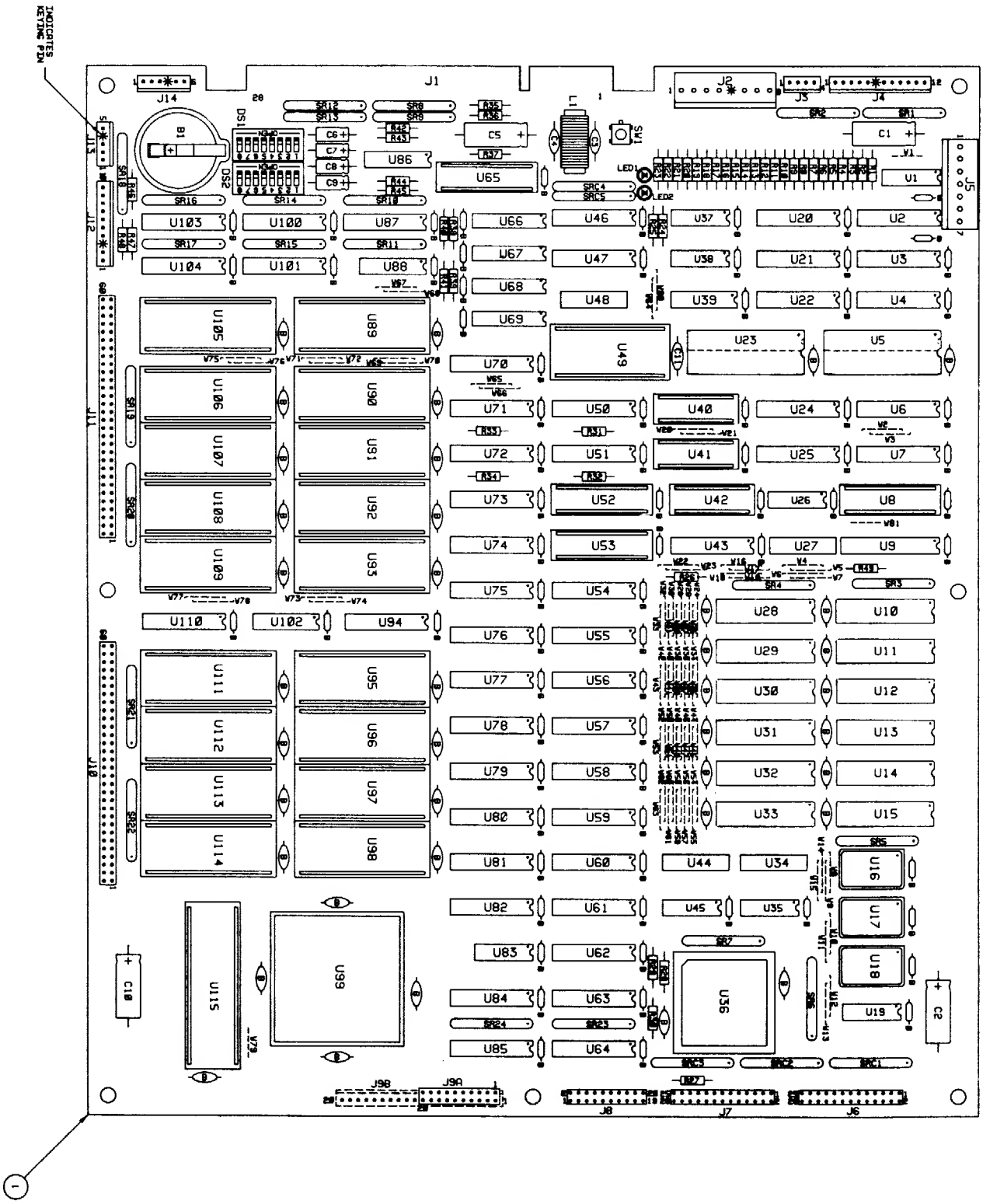

Y-UNIT CPU ASSEMBLY
p/n C-13234-3044

Part No.	Ckt.Designator	Description
5770-12555-00		Bare PC Brd.
5281-09737-00	U1	IC, 74LS 86
5317-12211-00	U2, U20, U24, U43 U61, U62, U70	IC, 74ALS541
5317-12212-00	U3, U6, U7, U21, U25 U50, U58, U63, U64 U71, U72, U74, U79, U84, U85	74ALS574
5317-12208-00	U4, U22, U54-U57 U59, U60, U75-U78 U80, U81, U94, U110	74ALS245
5340-12242-00	U5, U23	IC, 8K x 8 S RAM
5700-12047-00	U8, U52, U53, U65	24 pin Socket
5340-12213-00	U10, U11, U28-U33	IC, 4461 VRAM
5521-12604-00	U16	40 MHZ Xtal
5521-10318-00	U17	24 MHZ Xtal
5283-10468-00	U19, U45	IC, 74F74
5019-10849-00	U27, U34, U44, U48	100Ω DIP Res.
5317-12305-00	U35	IC, 74ALS00
5700-12253-00	U36	68 pin Socket
5280-09309-00	U37	IC, 7407
5281-09487-00	U38	IC, 74LS74
5434-12255-00	U39	IC, MAX691
5700-09915-00	U40-U42	20 pin Socket
5311-12287-00	U47, U46, U67, U100 U101, U103, U104	IC, 74HC541
5700-10176-00	U49	28 pin Socket
5311-12285-00	U51, U73, U82	IC, 74HC573
5340-12014-00	U66-U69	IC, 4464 DRAM
5283-10552-00	U83	IC, 74F04
5370-12602-00	U86	IC, ULN2064B
5317-12023-00	U88	IC, 74ALS138
5700-12088-00	U89-U93, U95-U98 U105-U109, U111-U114	32 pin Socket
5700-12254-00	U99	144 pin Socket
5317-12024-00	U102	IC, 74ALS139
5700-08985-00	U115	40 pin Socket
5010--08991-00	R1,R24, R27	Res. 4.7KΩ 5% 1/4W
5010-10204-00	R2, R7, R12	Res. 1KΩ 2% 1/4W
5010-10205-00	R3, R8, R13	Res. 2KΩ 2% 1/4W
5010-10000-00	R4, R9, R14	Res. 3.9KΩ 5% 1/4W
5010-09219-00	R5, R10, R15	Res. 8.2KΩ 5% 1/4W
5010-08772-00	R6, R11, R16	Res. 15KΩ 5%1/4W
5010-09001-00	R23, R25	Res. 330Ω 5% 1/4W
5010-09036-00	R26, R29-R34	Res. 100Ω 5% 1/4W
5010-09416-00	R35-R37, R46-R48	Res. 470Ω 5% 1/4W
5010-08997-00	R38-R45	Res. 2.7Ω 5% 1/4W
5010-09534-00	W2, W8, W11, W12 W14, W20, W22, W24 W27, W28, W31, W32, W35, W39, W41, W43 W44, W46, W48, W50, W52, W54, W56, W58 W60, W62, W66, W68, W69, W72, W74, W76 W78, W80	Res. 0Ω
5043-08980-00	B	Cap. .01 µfd 10V
5040-08986-00	C1, C2, C5, C10	Cap. 100µfd 10V
5043-09845-00	C3, C4	Cap. .001µfd 10V
5041-09243-00	C6-C9	Cap. 10µfd 10V
5043-8996-00	C11	Cap. .1µfd
5019-12611-00	SR1, SR2, SR8 SR9, SR12, SR13, SR18	SIP, 470Ω 5 Res.
5019-09362-00	SR3, SR4, SR6 SR7, SR11, SR15 SR17, SR19-SR24 SRC1-SRC3	SIP, 4.7KΩ
5019-10143-00	SR5	SIP, 470Ω 9 Res.
5060-10396-00	SRC4, SRC5 SRC10, SRC14 SRC16	SIP. 4.7KΩ 470pf
5671-09019-00	LED1, LED 2	LED, Red
5551-09822-00	L1	Inductor, 4.7UH
5645-09025-00	DS1, DS2	DIP. Sw. 16 pin
5641-12551-00	SW1	Pushbutton Sw.
5881-12315-00	B1	Battery Holder
5791-10862-00	J2	8 pin Connector
5791-12461-00	J4	12 pin Connector
5791-10850-00	J6, J7	26 pin Ribbon Connector
5791-09437-00	J8	20 pin Ribbon Connector
5791-12461-10	J12	10 pin Connector

Part No.	Ckt. Designator	Description
C13235-1		CPU Subassembly (Includes all parts except the following list)
A-5343-3044-1	U89	IC, Game EPROM
A-5343-3044-10	U105	IC, Game EPROM
A-5343-3044-11	U106	IC, Game EPROM
A-5343-3044-12	U107	IC, Game EPROM
A-5343-3044-13	U108	IC, Game EPROM
A-5343-3044-14	U109	IC, Game EPROM
A-5343-3044-15	U111	IC, Game EPROM
A-5343-3044-16	U112	IC, Game EPROM
A-5343-3044-17	U113	IC, Game EPROM
A-5343-3044-18	U114	IC, Game EPROM
A-5343-3044-2	U90	IC, Game EPROM
A-5343-3044-3	U91	IC, Game EPROM
A-5343-3044-4	U92	IC, Game EPROM
A-5343-3044-5	U93	IC, Game EPROM
A-5343-3044-6	U95	IC, Game EPROM
A-5343-3044-7	U96	IC, Game EPROM
A-5343-3044-8	U97	IC, Game EPROM
A-5343-3044-9	U98	IC, Game EPROM
A-5346-3044-1	U8	IC, PLD Color RAM Control
A-5346-3044-2	U40	IC, PLD Address Decode
A-5346-3044-3	U41	IC, PLD Video RAM Control
A-5346-3044-4	U42	IC, PLD Local Control
A-5346-3044-5	U52	IC, PLD Video RAM Sequencer
A-5346-3044-6	U53	IC, PLD Image ROM Control
A-5346-3044-7	U65	IC, PLD Miscellaneous Control
A-5346-3044-8	U115	IC, PLD Autoerase Controller
5340-12558-00	U49	IC, 8K x 8 Static RAM 150ns Low Power
5400-12220-00	U36	IC, TMS34010-50 GSP
5410-12239-00	U99	IC, Custom Asic
5880-11056-00	B1	Battery, Lithium 3V

POWER SUPPLY SWITCHER ASSEMBLY
p/n C-13253

Part Number	Description
20-9633	Power Supply, 85W
01-9254	Shield
16-8587-701	High Voltage Label

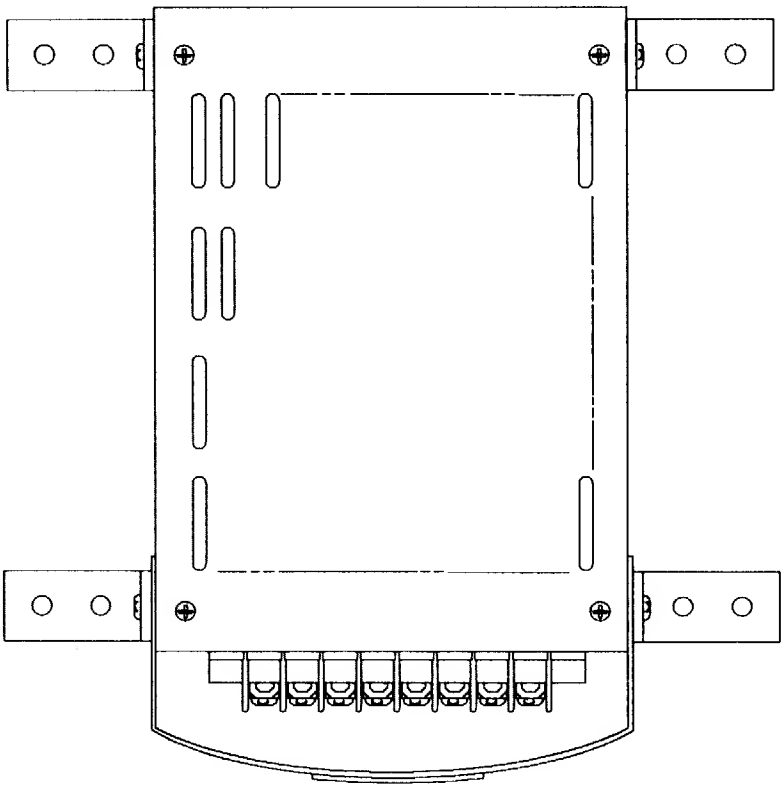

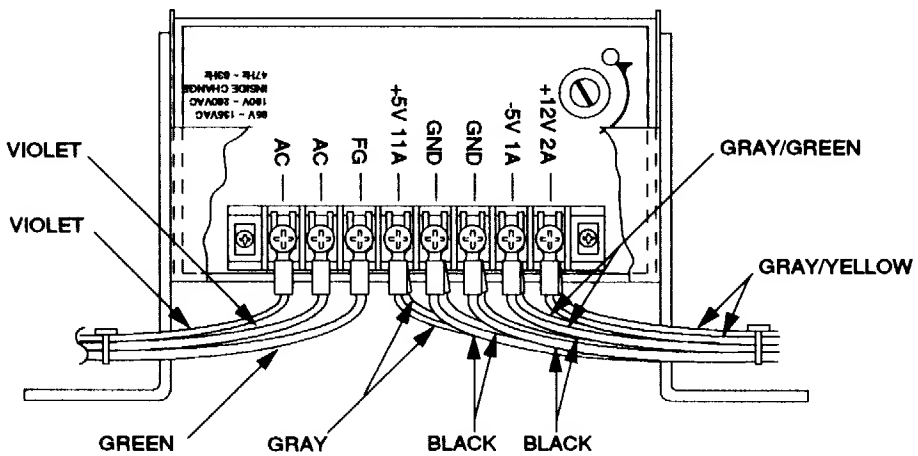

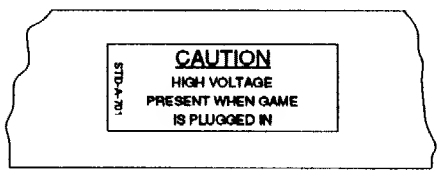

SMASH TV

SECTION
THREE

Diagrams & Schematics

AUDIO SCHEMATIC
p/n 16-9084

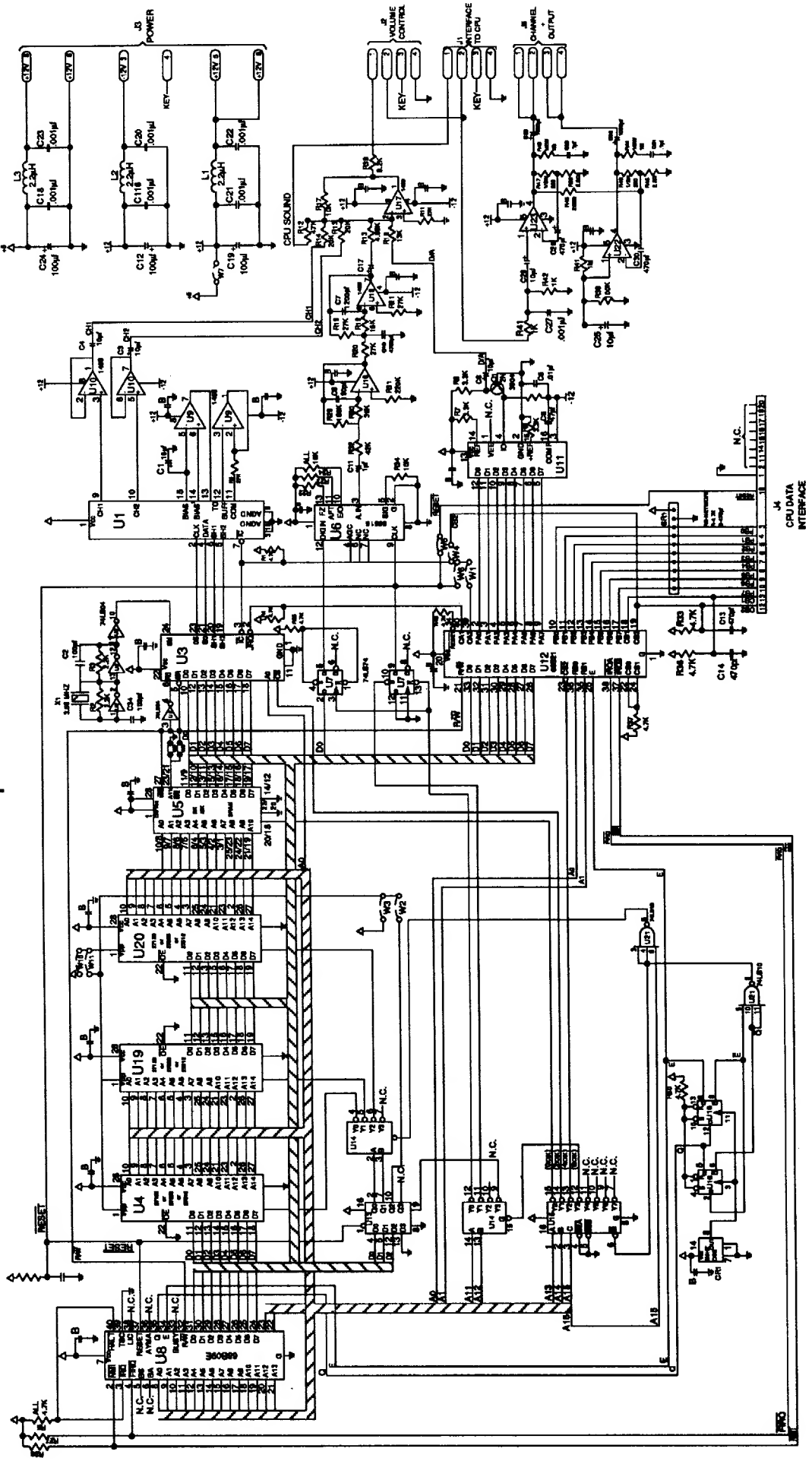

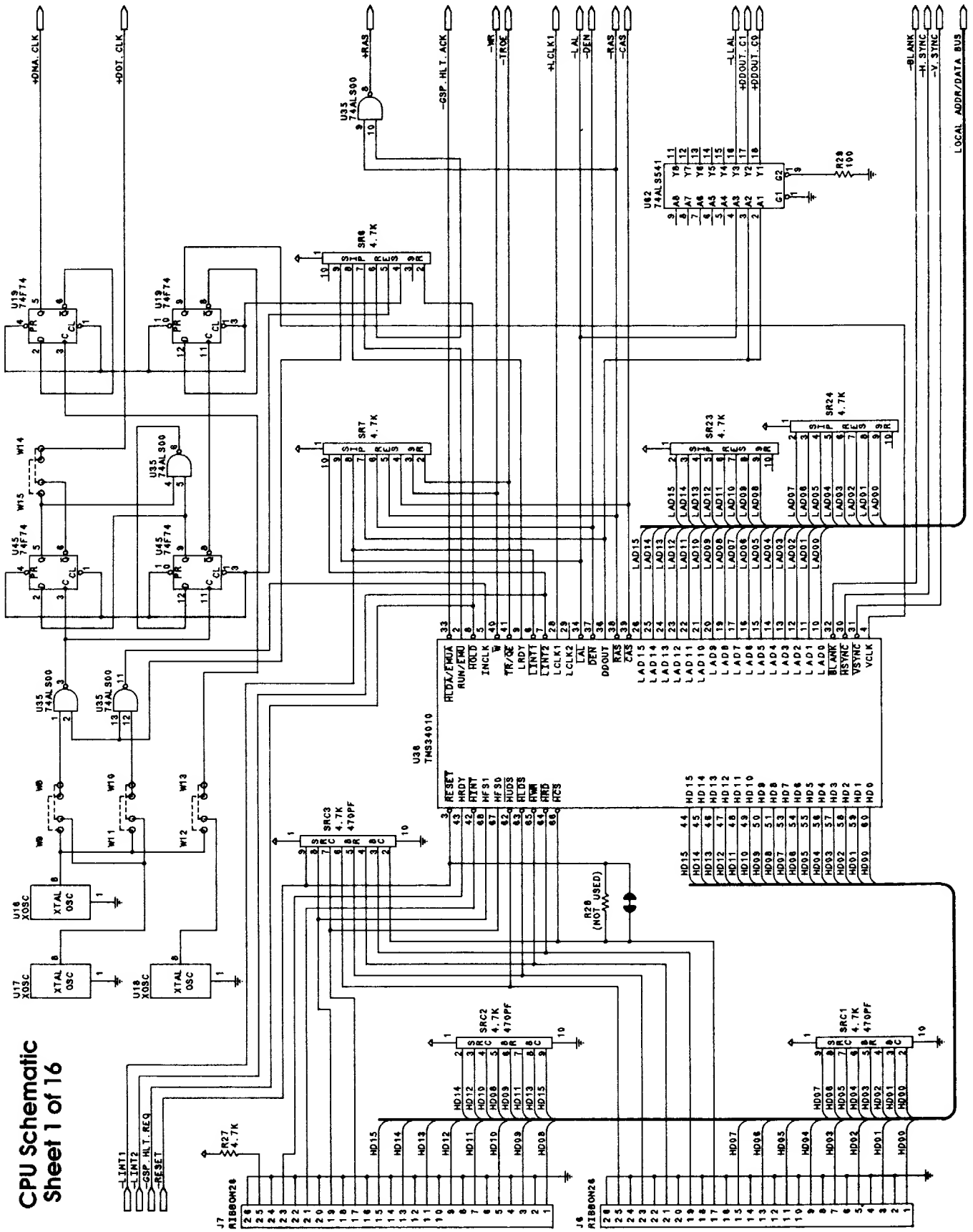
CPU Schematic
Sheet 1 of 16
+DNA.CLK
+DOT.CLK
-GSP.HLT.ACK
-MR
-TROE
+LCLK1
-LAL
-DEN
-RAS
-CAS
+RAS
-LLAL
+DDOUT.C1
+DDOUT.C0
-BLANK
-H.SYNC
-V.SYNC
LOCAL ADDR/DATA BUS
U35 74AL300
U19 74F74
U45 74F74
U62 74AL3541
U36 TMS34010
U16 XOSC
U17 XOSC
U18 XOSC
SR6 4.7K
SR7 4.7K
SR23 4.7K
SR24 4.7K
SRC3 4.7K 470PF
SRC2 4.7K 470PF
SRC1 4.7K 470PF
R28 100
R20 (NOT USED)
R27 4.7K
-INT1
-INT2
-GSP.HLT.REQ
-RESET
J7 RIBBON26
J8 RIBBON26

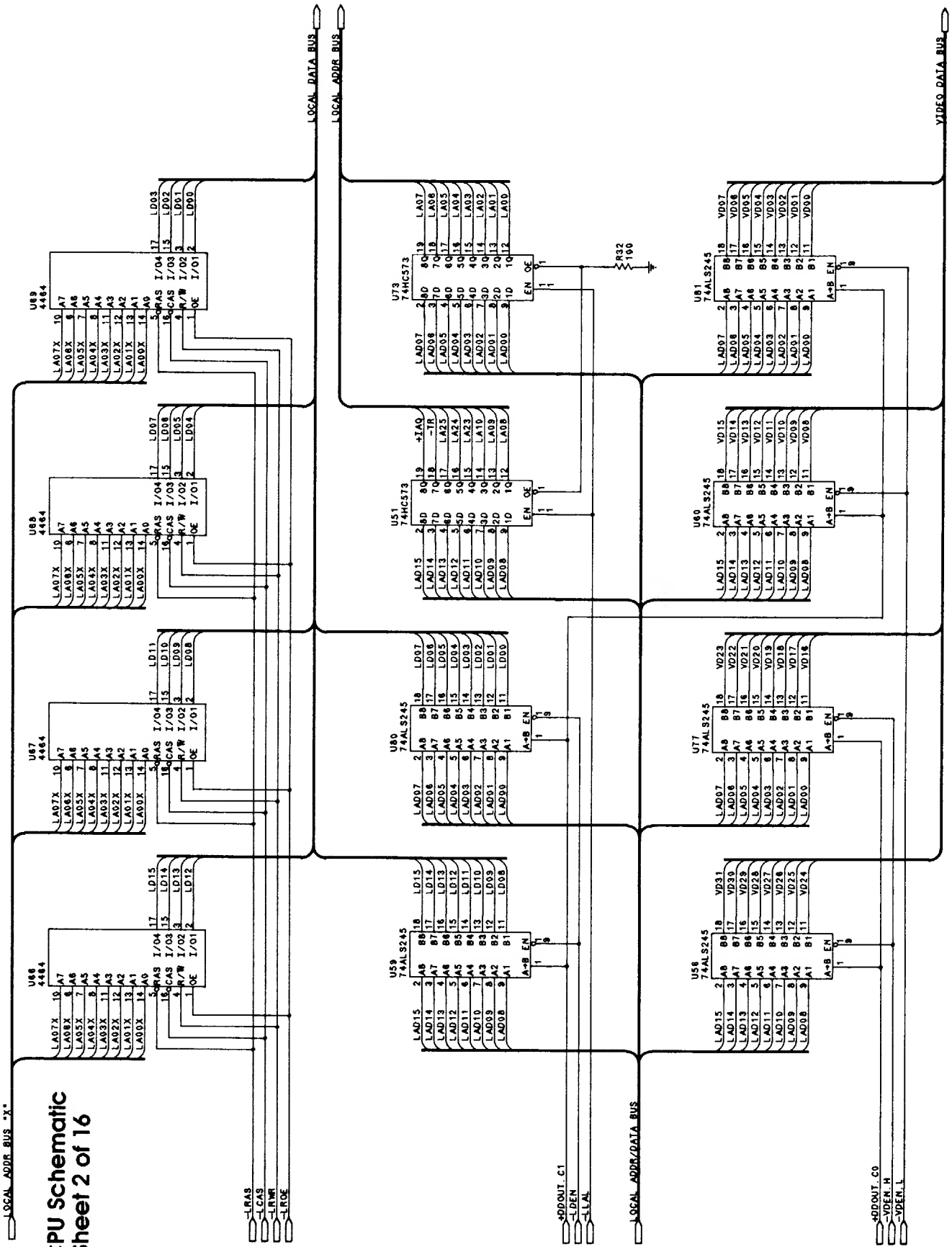

CPU Schematic
Sheet 2 of 16

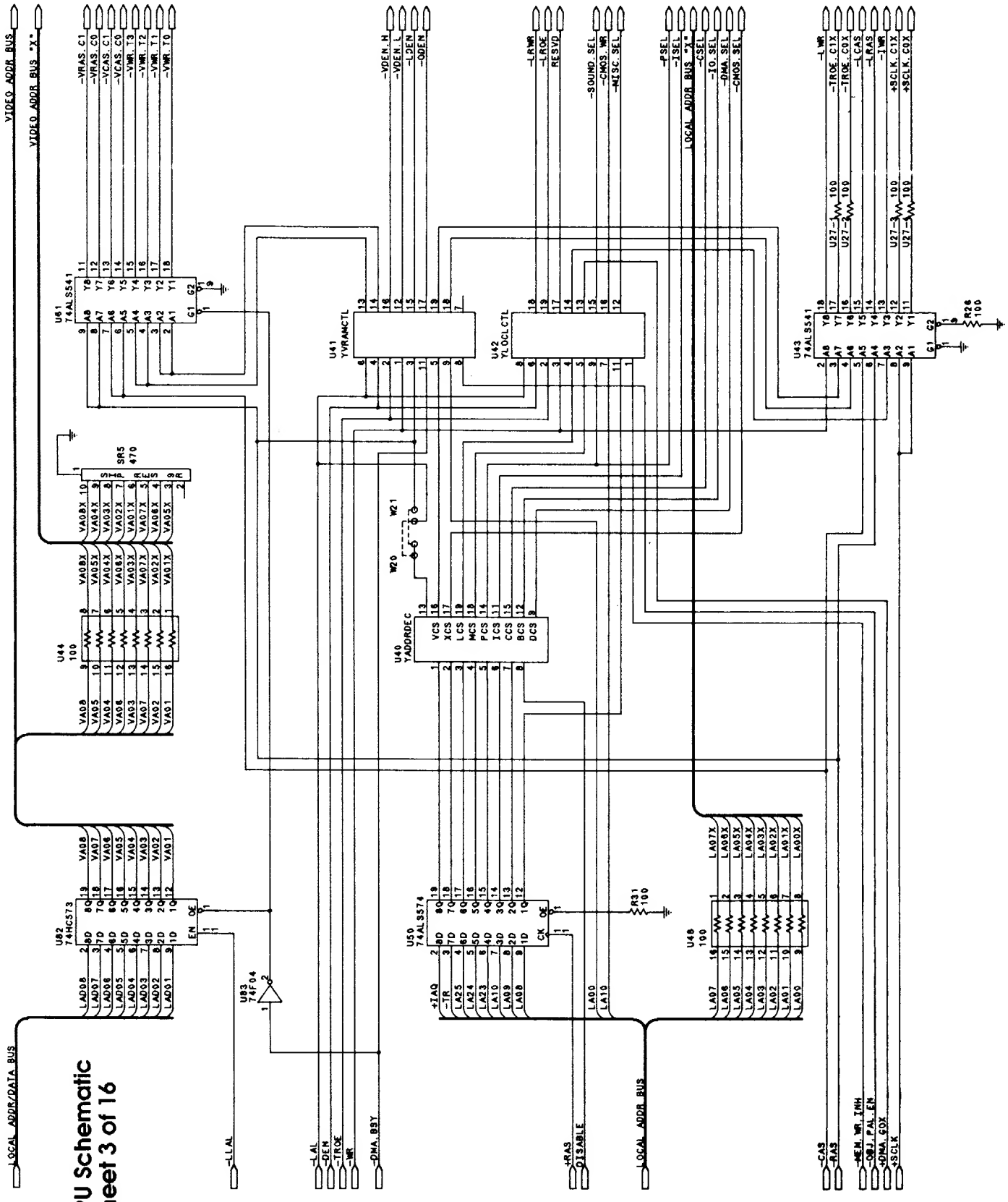
CPU Schematic
Sheet 3 of 16
LOCAL ADDR/DATA BUS
VIDEO ADDR BUS
VIDEO ADDR BUS "X"
LOCAL ADDR BUS
LOCAL ADDR BUS "X"
U82 74HC573
U83 74F04
U44 100
U61 74ALS541
U41 YVRAMCTL
U42 YLOCLCTL
U40 YADDRDEC
U50 74ALS374
U48 100
U43 74ALS541
SR5 470
R31 100
R26 100
W20
W21
-LAL
-DEN
-TRDE
-WR
-DMA.BSY
-RAS DISABLE
-CAS
-RAS
-MEM.WR.INH
-OBJ.PAL.EN
-DMA.COX
+SCLK

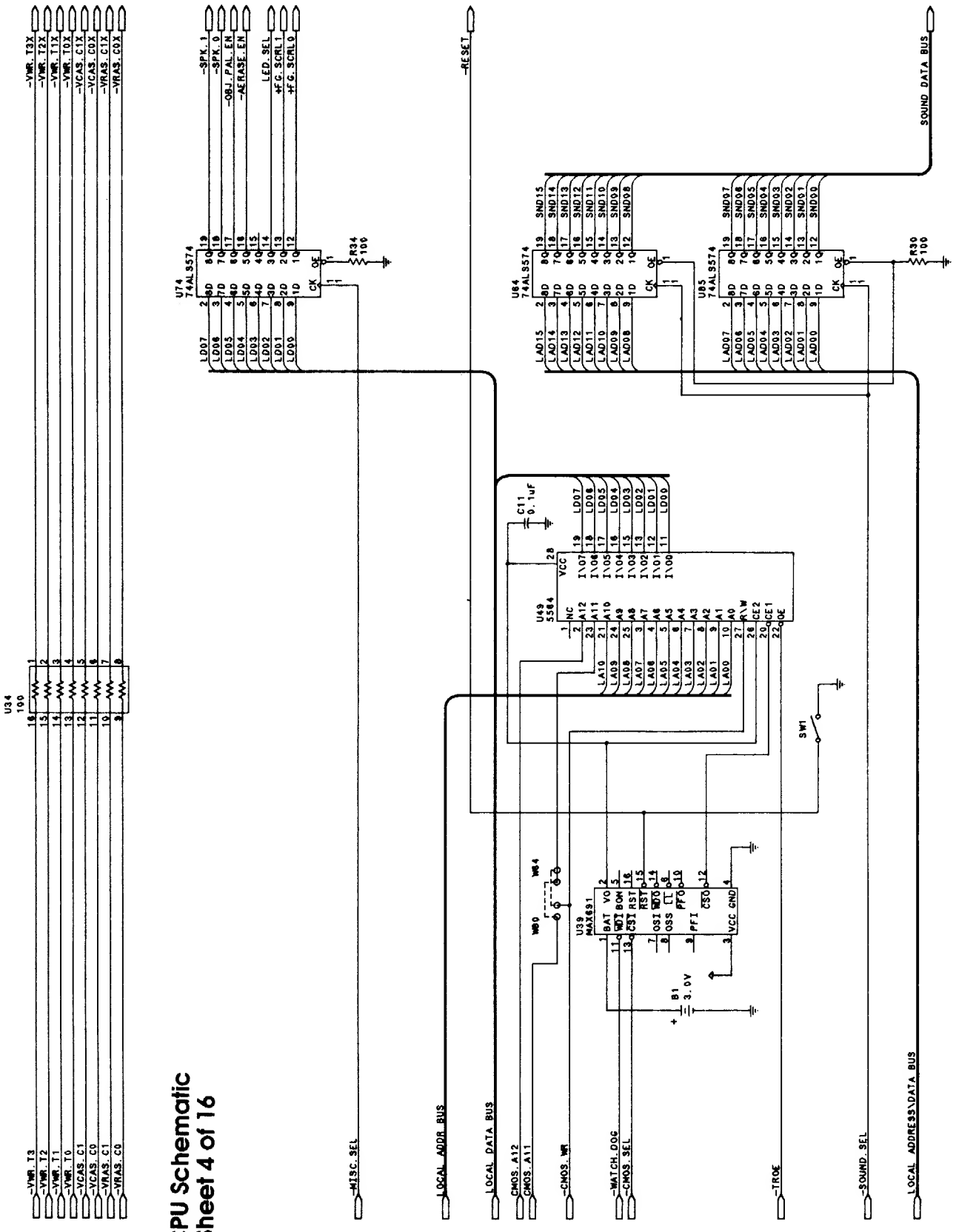

CPU Schematic
Sheet 4 of 16

CPU Schematic
Sheet 5 of 16

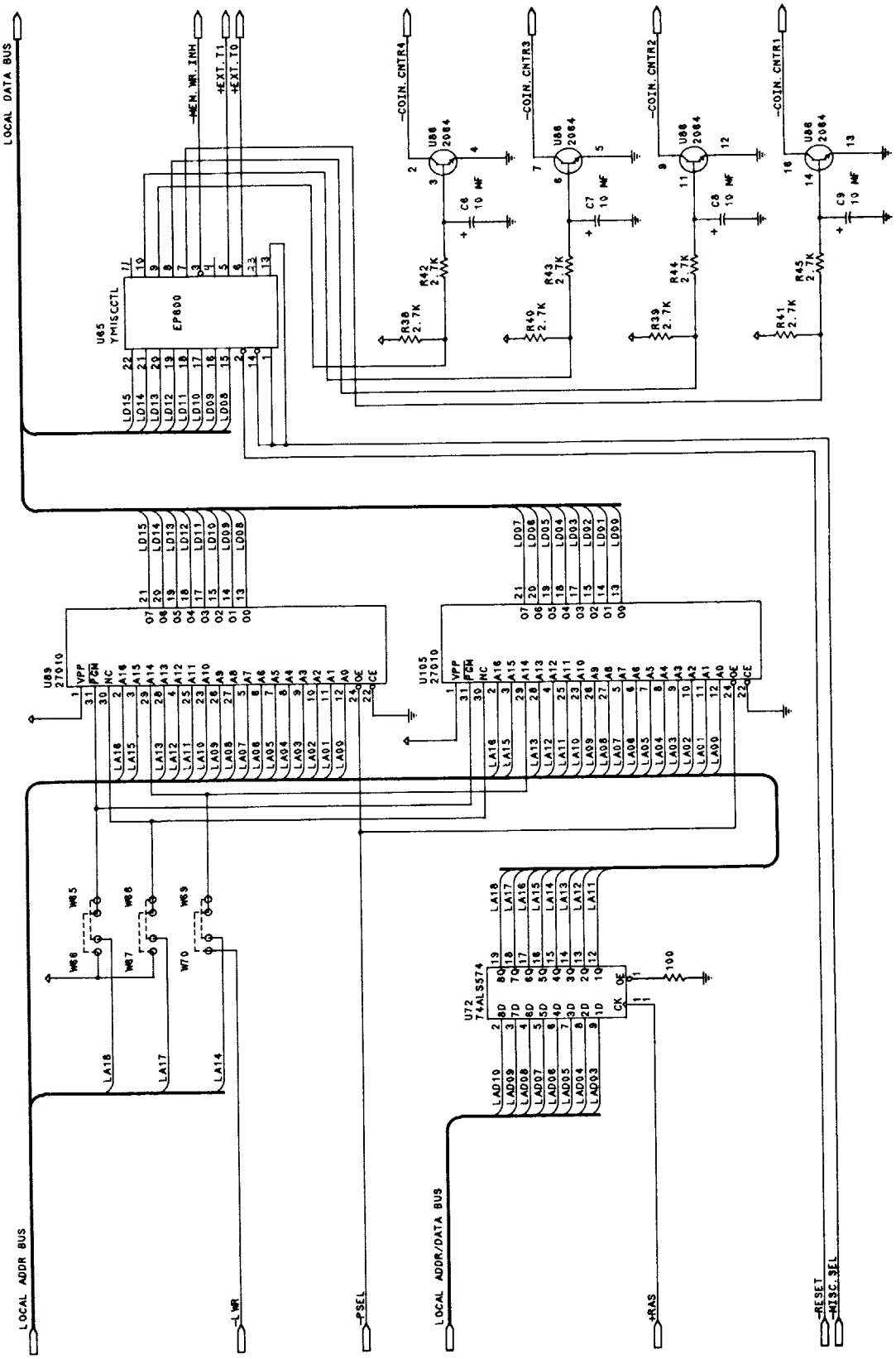

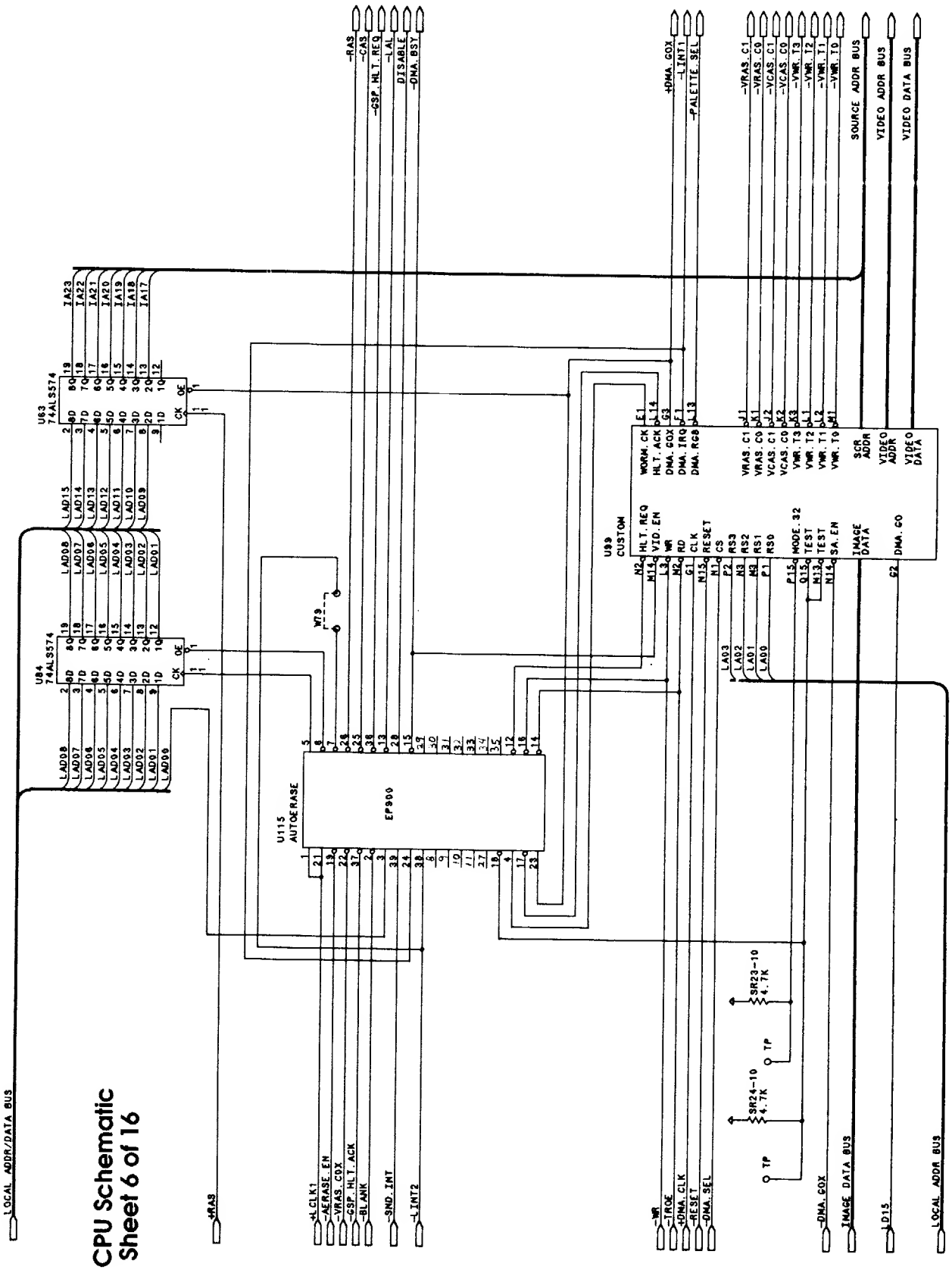

CPU Schematic
Sheet 6 of 16

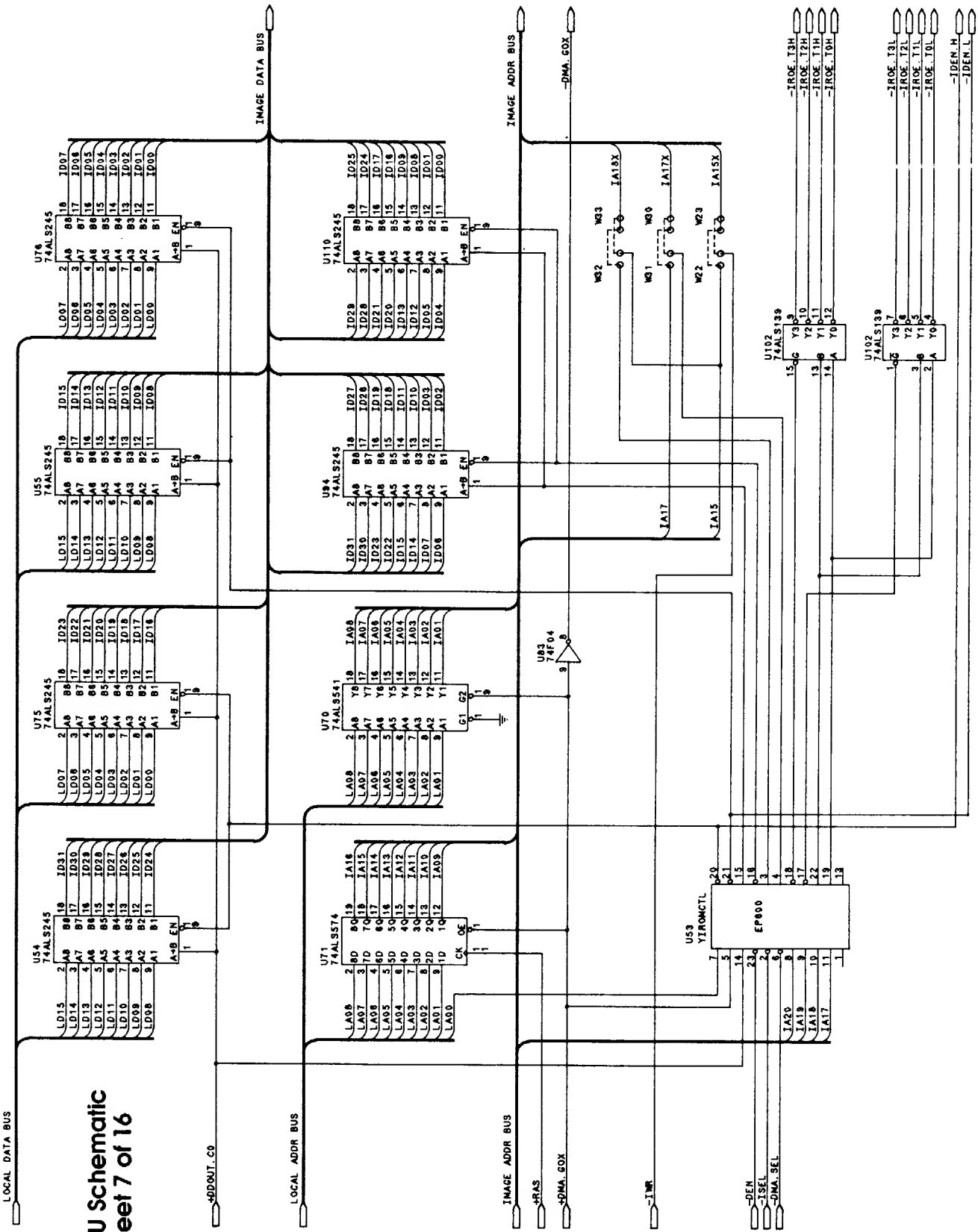
CPU Schematic
Sheet 7 of 16
LOCAL DATA BUS
IMAGE DATA BUS
IMAGE ADDR BUS
-DMA.GOX
LOCAL ADDR BUS
+DDOUT.CO
+RAS
+DMA.GOX
-IWR
-DEN
-ISEL
-DMA.SEL
-IROE.T3H
-IROE.T2H
-IROE.T1H
-IROE.T0H
-IROE.T3L
-IROE.T2L
-IROE.T1L
-IROE.T0L
-IDEN.H
-IDEN.L
U54 74ALS245
U55 74ALS245
U75 74ALS245
U76 74ALS245
U84 74ALS245
U110 74ALS245
U70 74ALS541
U71 74ALS574
U83 74F04
U53 Y1ROMCTL EP900
U102 74ALS139
U102 74ALS139
W33
W32
W31
W30
W23
W22
IA18X
IA17X
IA15X
IA17
IA15

CPU Schematic
Sheet 8 of 16

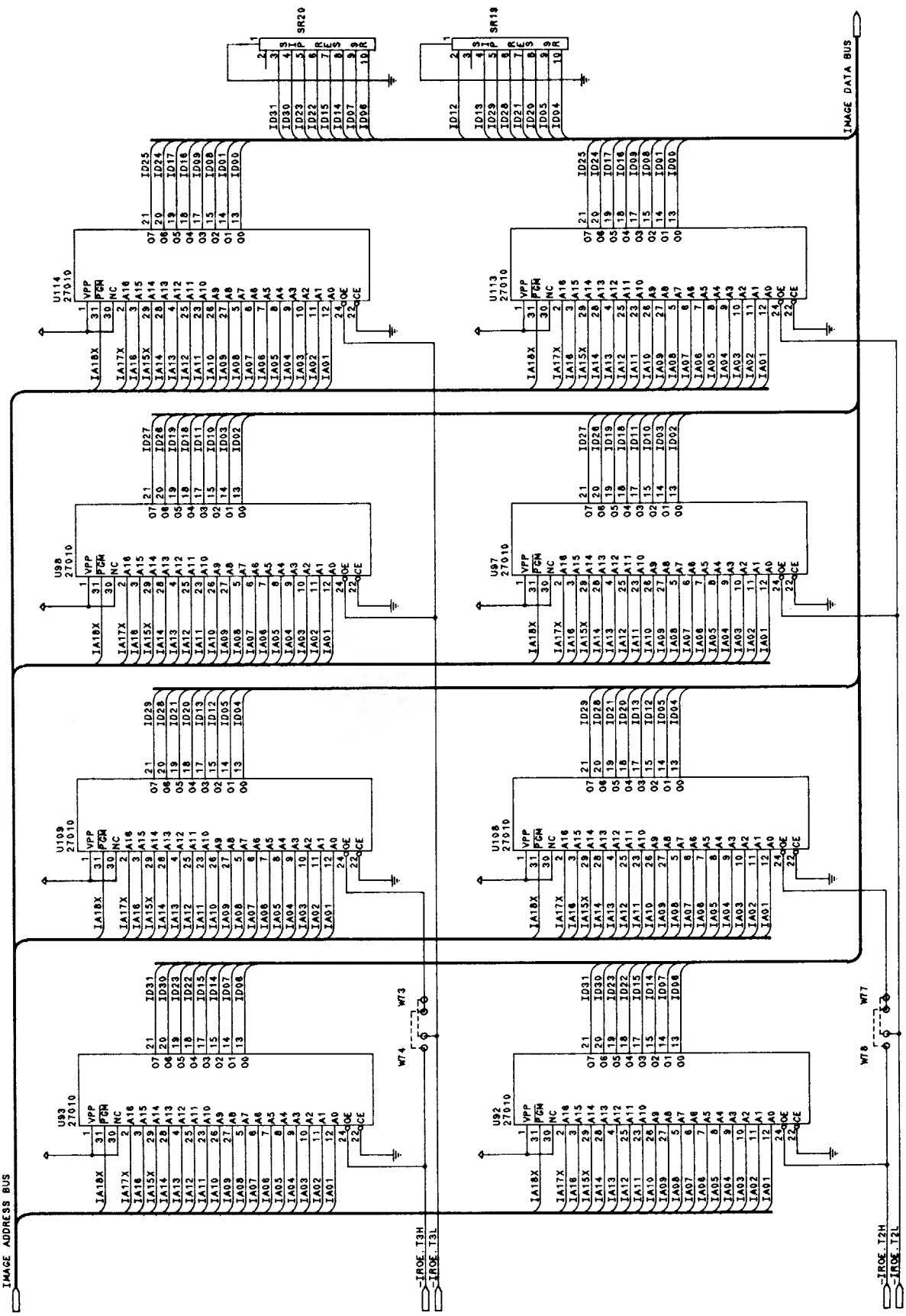

CPU Schematic
Sheet 9 of 16

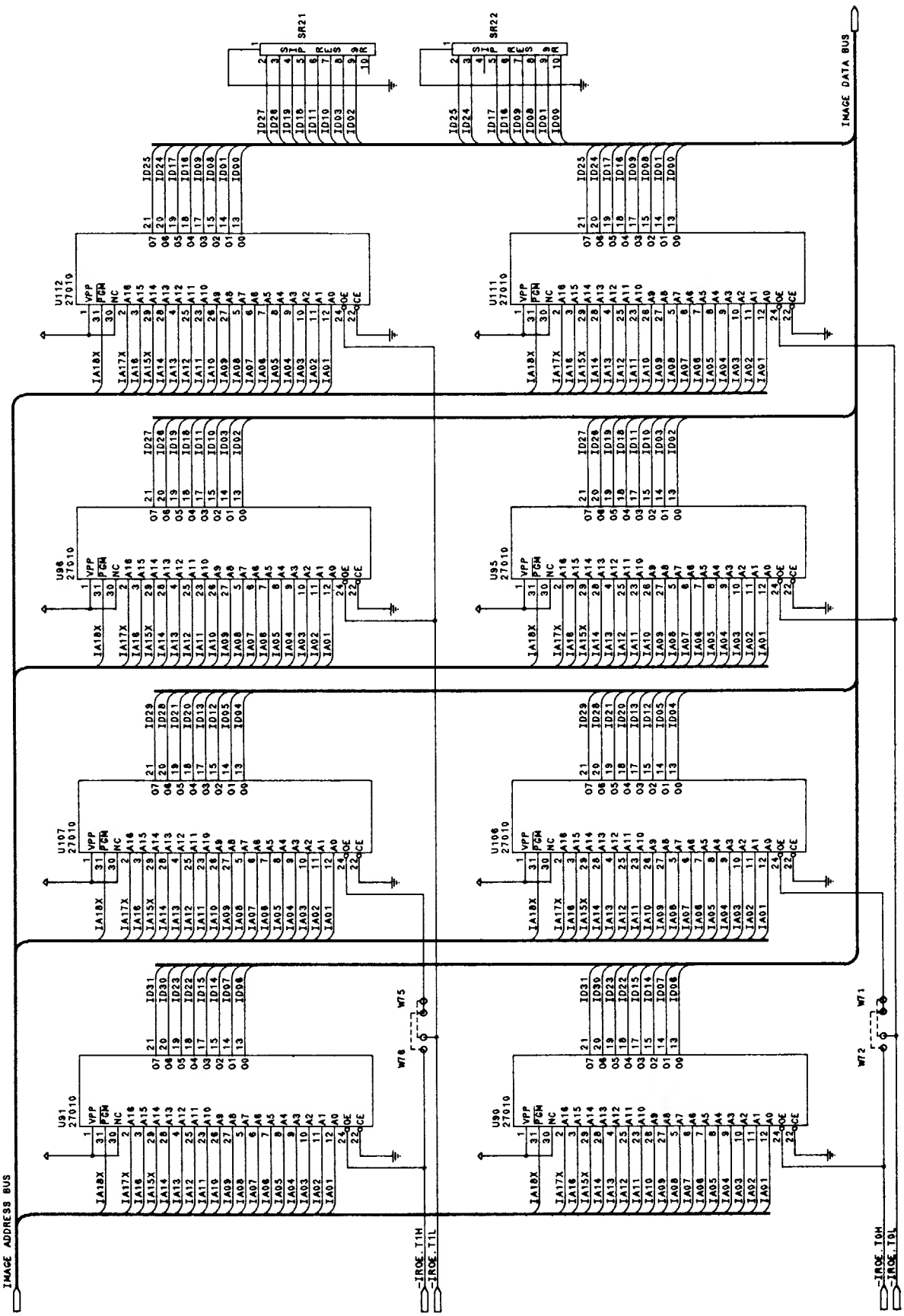

CPU Schematic
Sheet 10 of 16

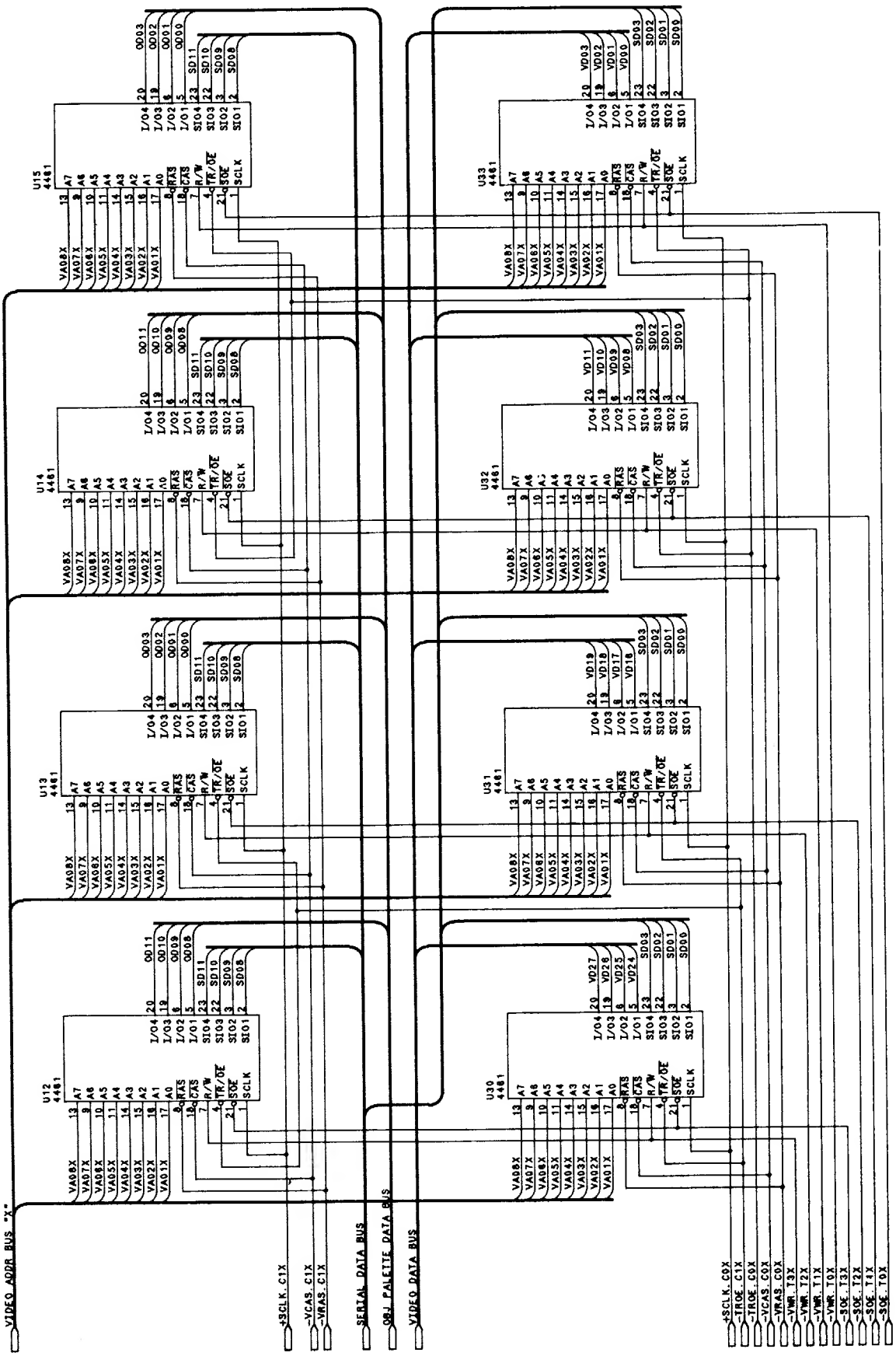

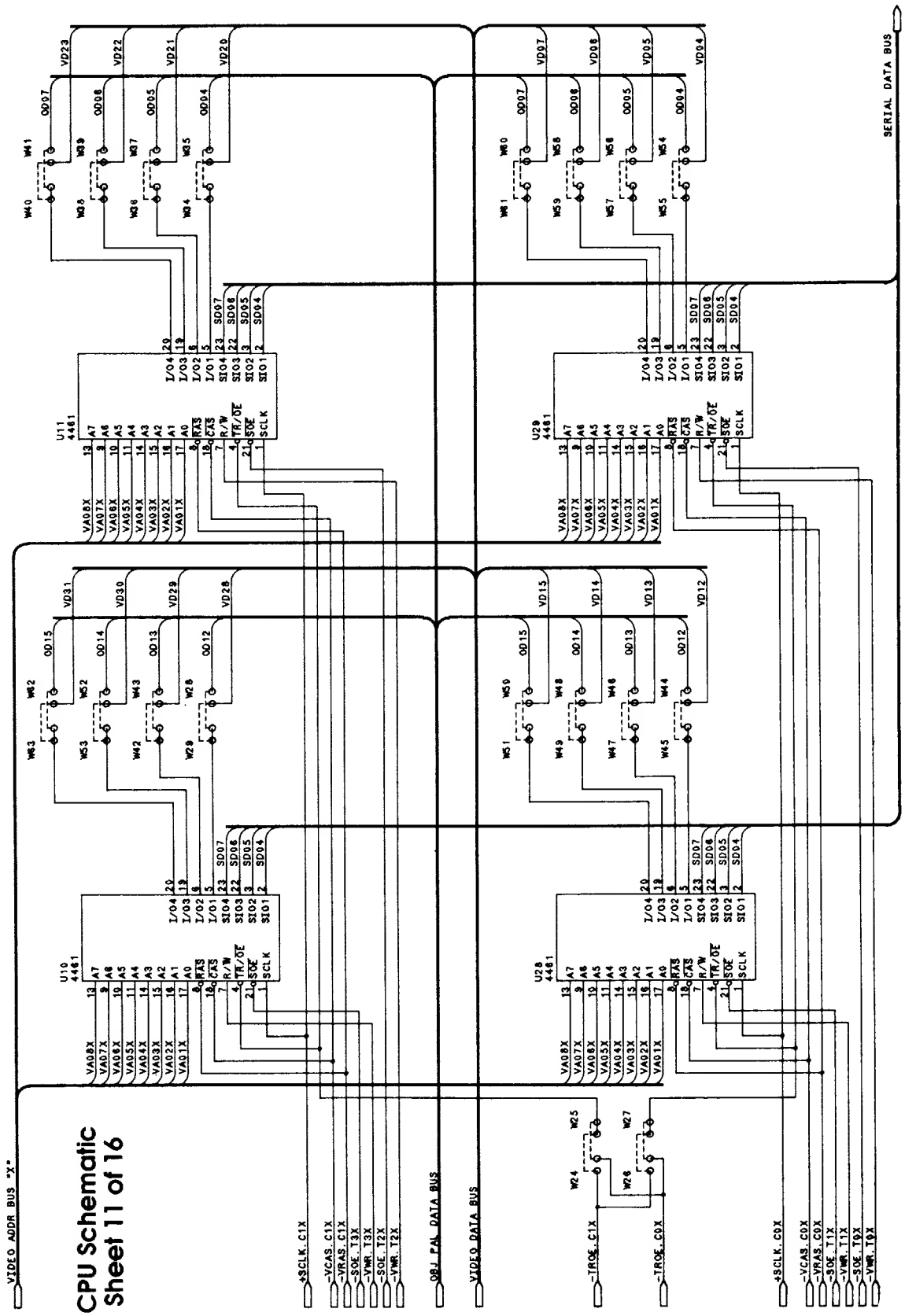
CPU Schematic
Sheet 11 of 16
VIDEO ADDR BUS "X"
OBJ PAL DATA BUS
VIDEO DATA BUS
SERIAL DATA BUS
U10 4461
U11 4461
U28 4461
U29 4461

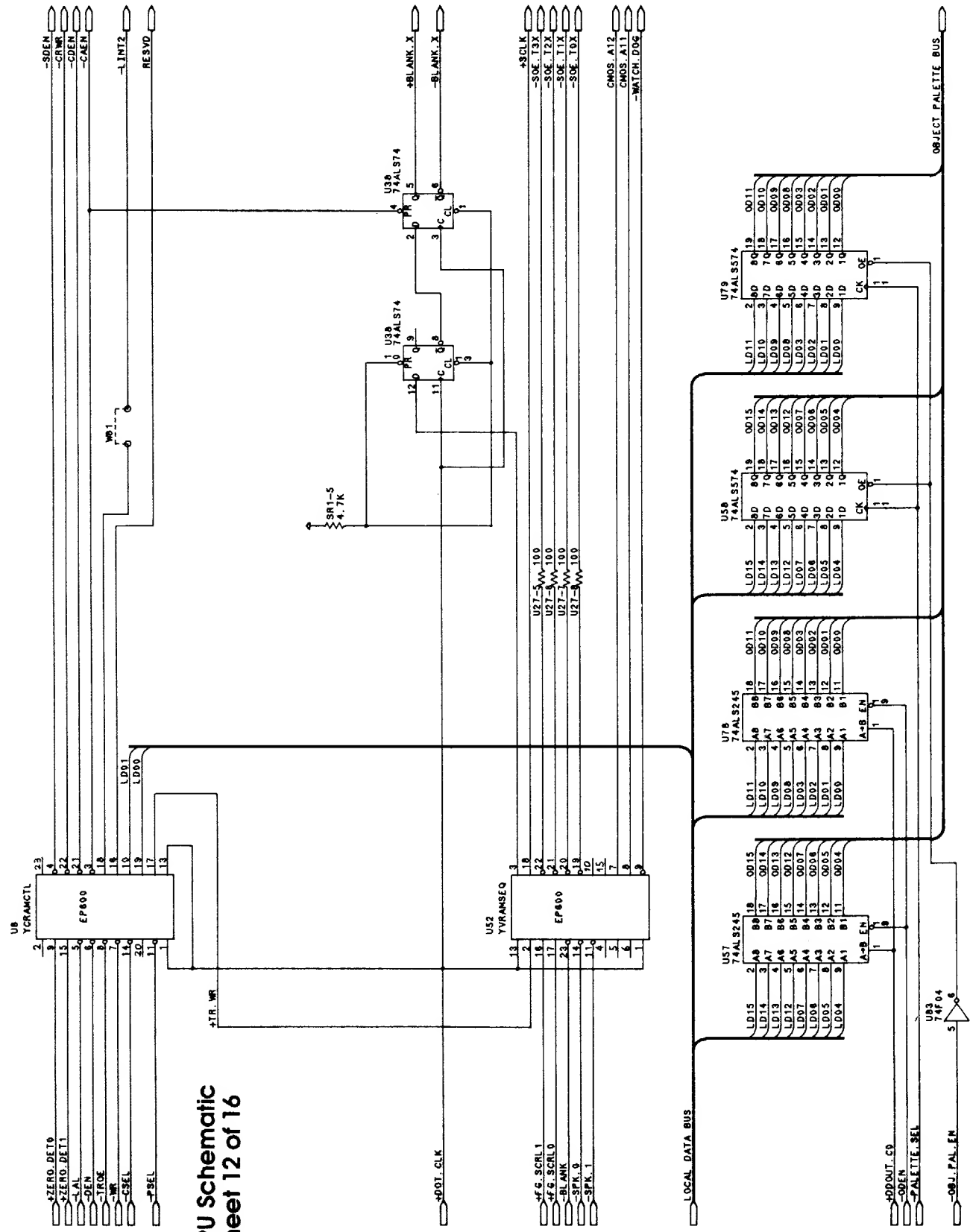

CPU Schematic
Sheet 12 of 16

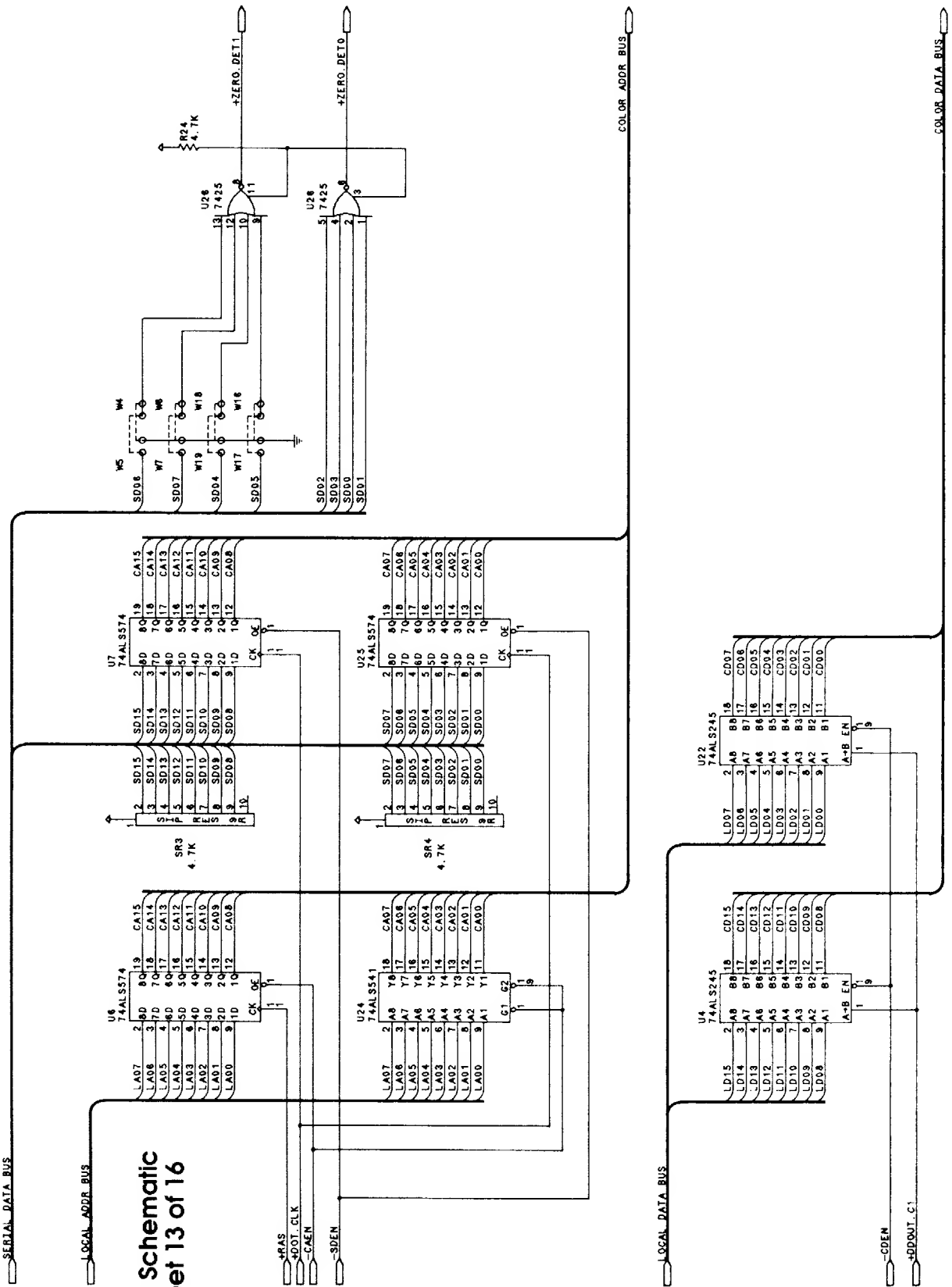
SERIAL DATA BUS
LOCAL ADDR BUS
+RAS
+DOT CLK
-CAEN
-SDEN
LOCAL DATA BUS
-CDEN
+DDOUT C1
COLOR ADDR BUS
COLOR DATA BUS
+ZERO DET1
+ZERO DET0
R24 4.7K
U26 7425
U28 7425
W4
W5
W6
W7
W18
W19
W16
W17
SD08
SD07
SD04
SD05
SD02
SD03
SD00
SD01
U7 74ALS574
U25 74ALS574
U6 74ALS574
U24 74ALS541
SR3 4.7K
SR4 4.7K
U22 74ALS245
U4 74ALS245
CPU Schematic
Sheet 13 of 16

CPU Schematic
Sheet 14 of 16

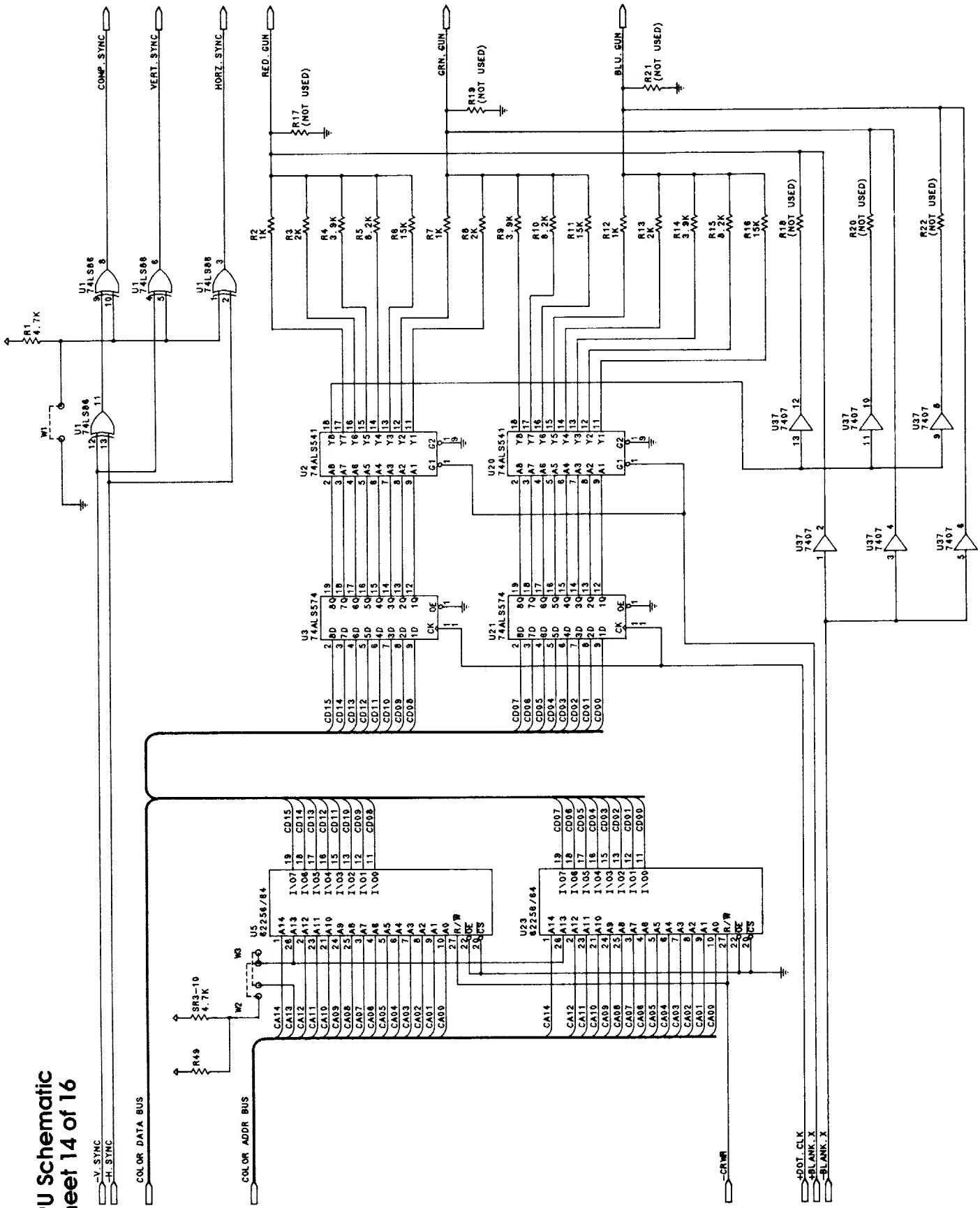

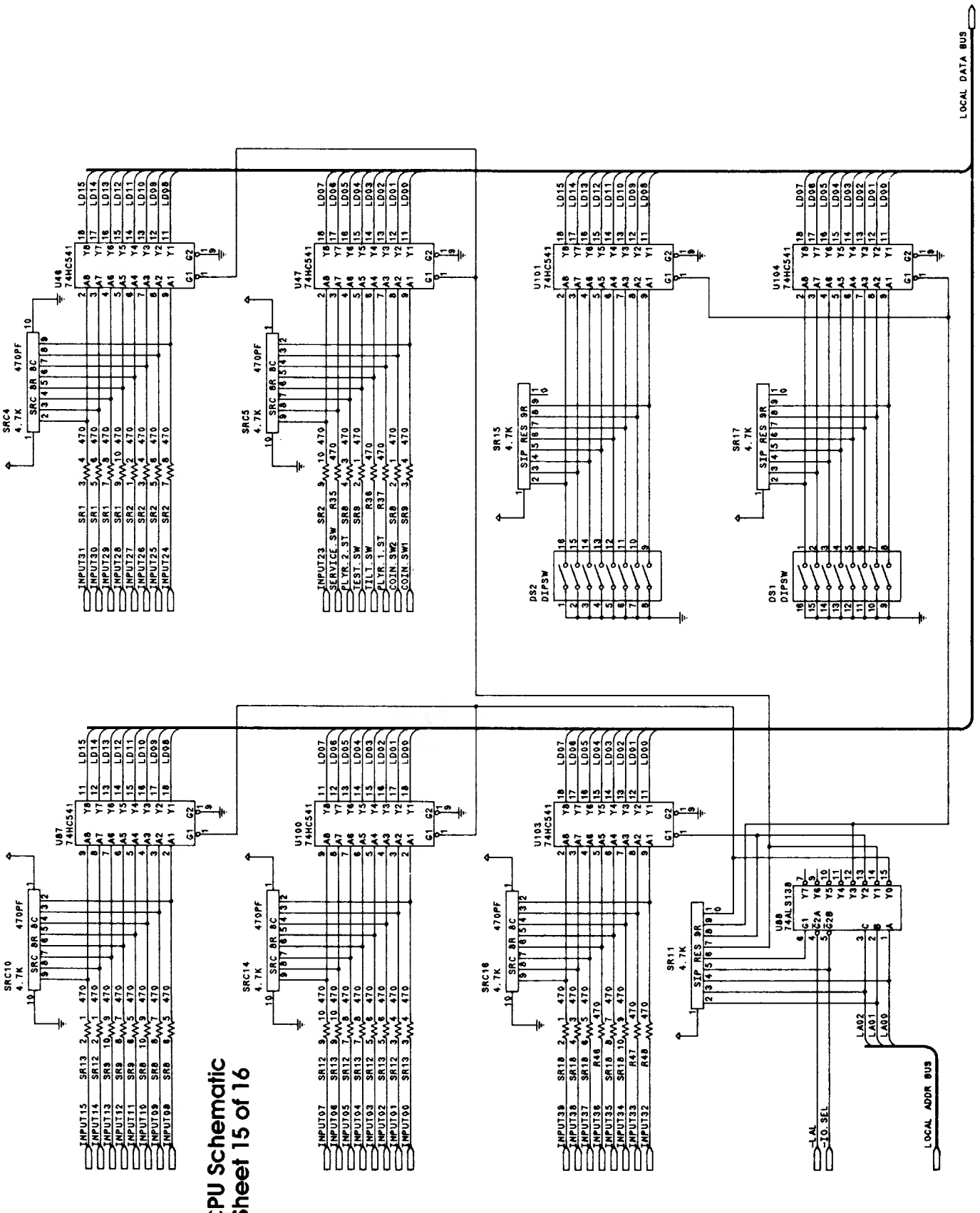

CPU Schematic
Sheet 15 of 16

CPU Schematic
Sheet 16 of 16

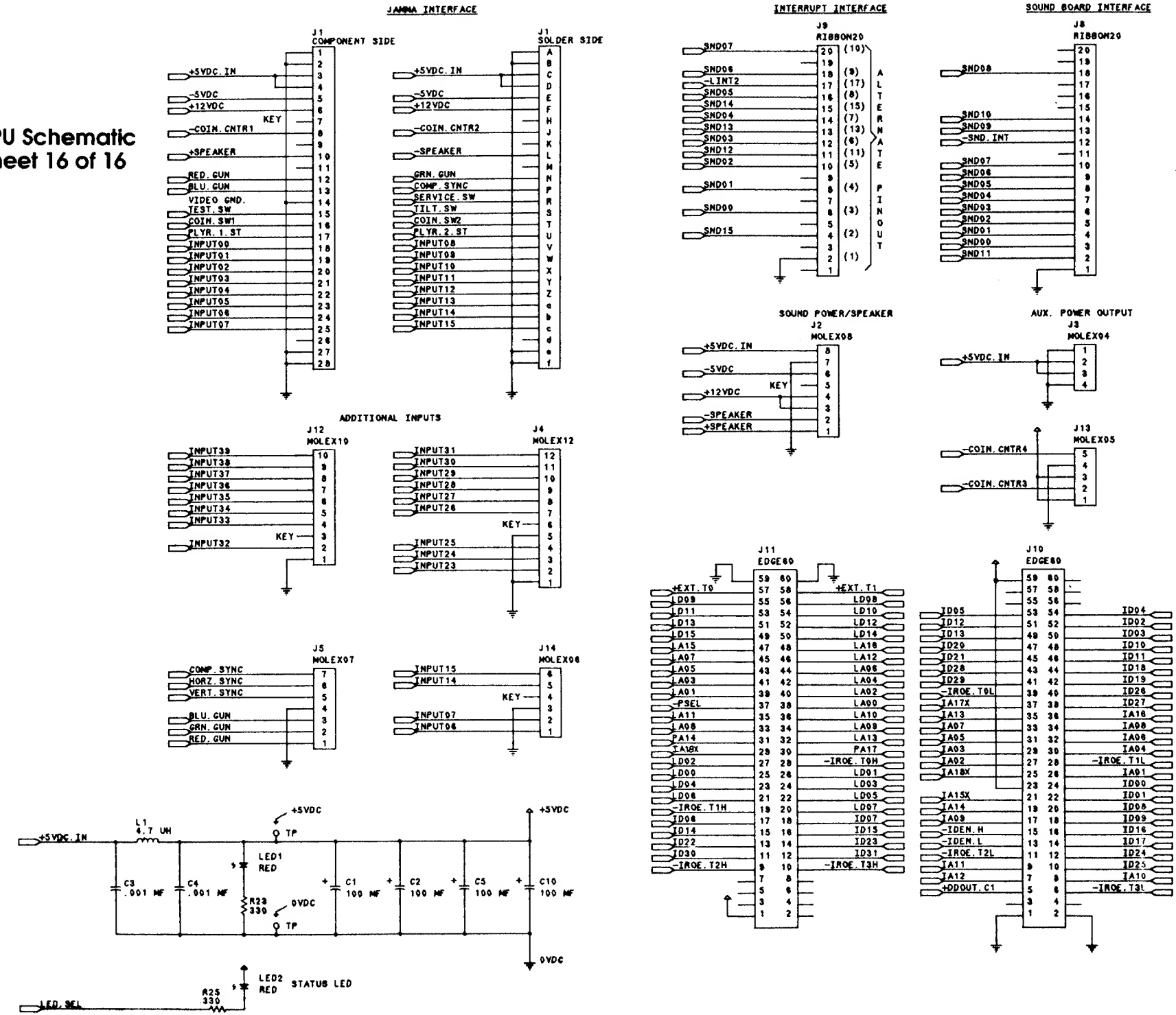

SMASH TV
Jamma Chart

Function	Wire Color	Pin	Pin	Wire Color	Function
GROUND	BLK	1	A	BLK	GROUND
GROUND	GRN-BRN	2	B	BLK	GROUND
+5 VOLTS DC	GRY	3	C	GRY	+5 VOLTS DC
+5 VOLTS DC	GRY	4	D	GRY	+5 VOLTS DC
- 5 VOLTS DC	GRY-GRN	5	E	GRY-GRN	- 5 VOLTS DC
+12 VOLTS DC	GRY-YEL	6	F	GRY-YEL	+12 VOLTS DC
	KEY	7	H	KEY	
COUNTER 1	WHT-ORG	8	J	WHT-GRN	COUNTER 2
	NC	9	K	NC	
SPEAKER (+)	RED-VIO	10	L	GRN-VIO	SPEAKER (-)
	NC	11	M	NC	
VIDEO RED	RED	12	N	GRN	VIDEO GRN
VIDEO BLU	BRN	13	P	WHT	VIDEO SYNC
VIDEO GND	SHIELD	14	R	WHT-RED	SERVICE
TEST	GRN	15	S	WHT-VIO	TILT
COIN 1	WHT-BLU	16	T	YEL-WHT	COIN 2
START 1	YEL-GRN	17	U	YEL-BLU	2 START
1 UP MOVE	ORG-BLK	18	V	YEL-BLK	2 UP MOVE
1 DOWN MOVE	ORG-BRN	19	W	YEL-BRN	2 DOWN MOVE
1 LEFT MOVE	ORG-RED	20	X	YEL-RED	2 LEFT MOVE
1 RIGHT MOVE	ORG	21	Y	YEL-ORG	2 RIGHT MOVE
1 UP FIRE	ORG-YEL	22	Z	YEL-VIO	2 UP FIRE
1 DOWN FIRE	ORG-GRN	23	a	YEL-GRY	2 DOWN FIRE
1 LEFT FIRE	ORG-BLU	24	b	VIO-BLK	2 LEFT FIRE
1 RIGHT FIRE	ORG-VIO	25	c	VIO-BRN	2 RIGHT FIRE
NC	ORG-GRY	26	d	VIO-RED	NC
	NC	27	e	NC	
GROUND	BLK	28	f	BLK	GROUND

SMASH TV CABINET WIRING (25 ")

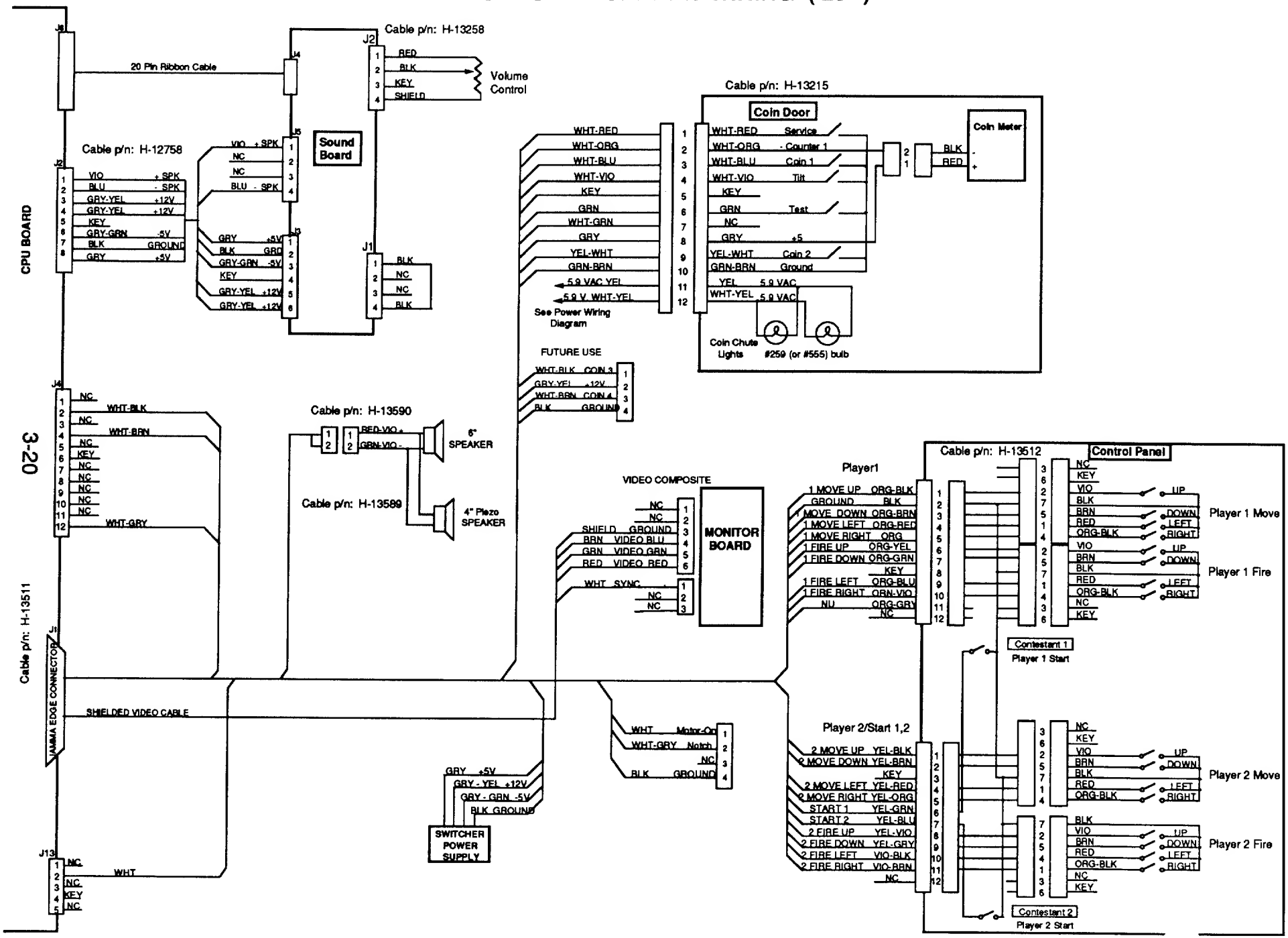

SMASH TV POWER WIRING DIAGRAM

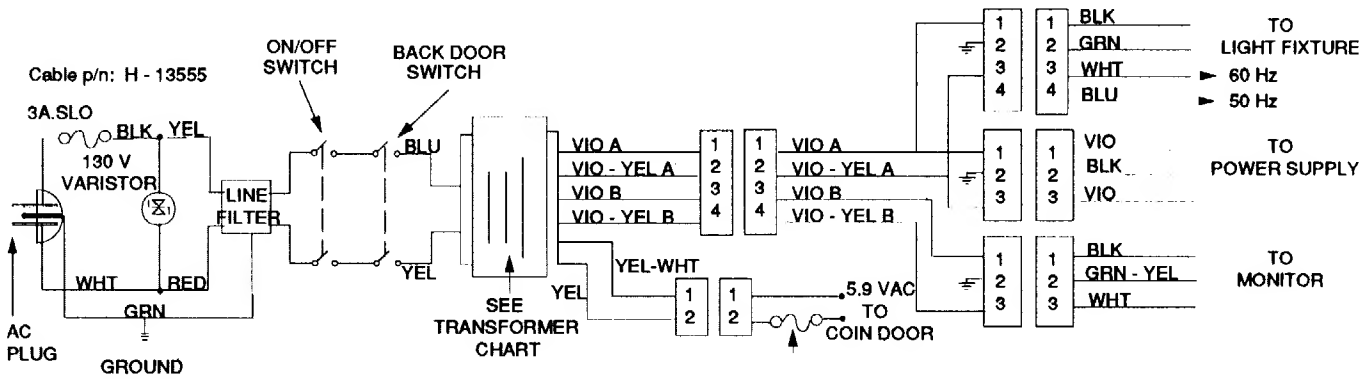

TRANSFORMER CHART

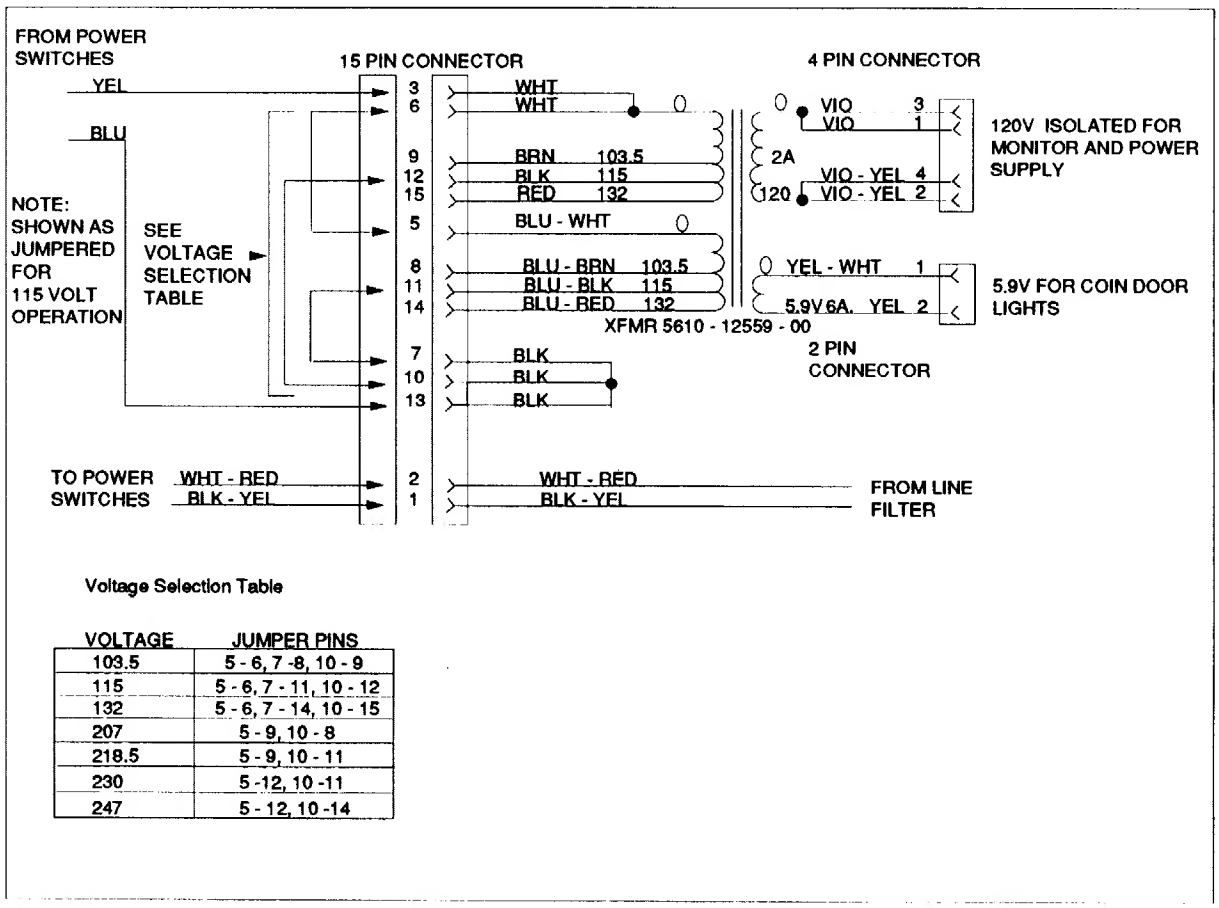

Voltage Selection Table

VOLTAGE	JUMPER PINS
103.5	5 - 6, 7 -8, 10 - 9
115	5 - 6, 7 - 11, 10 - 12
132	5 - 6, 7 - 14, 10 - 15
207	5 - 9, 10 - 8
218.5	5 - 9, 10 - 11
230	5 -12, 10 -11
247	5 - 12, 10 -14

SMASH TV INTERBOARD WIRING

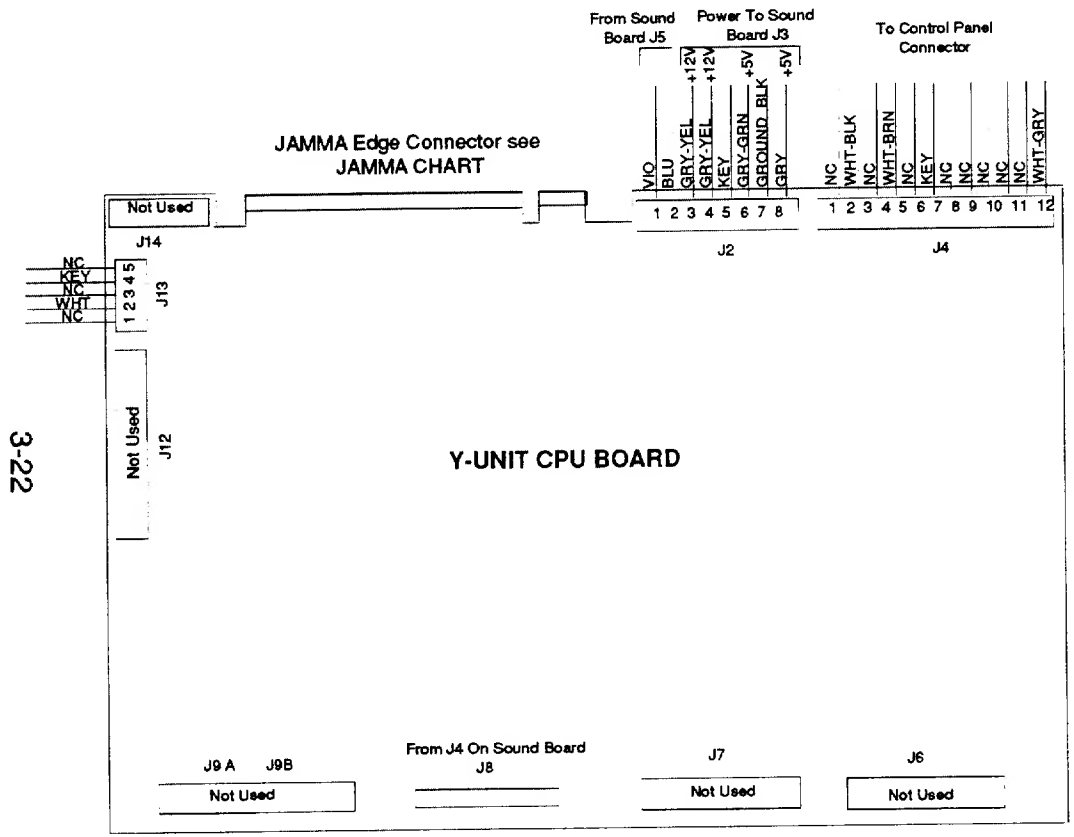

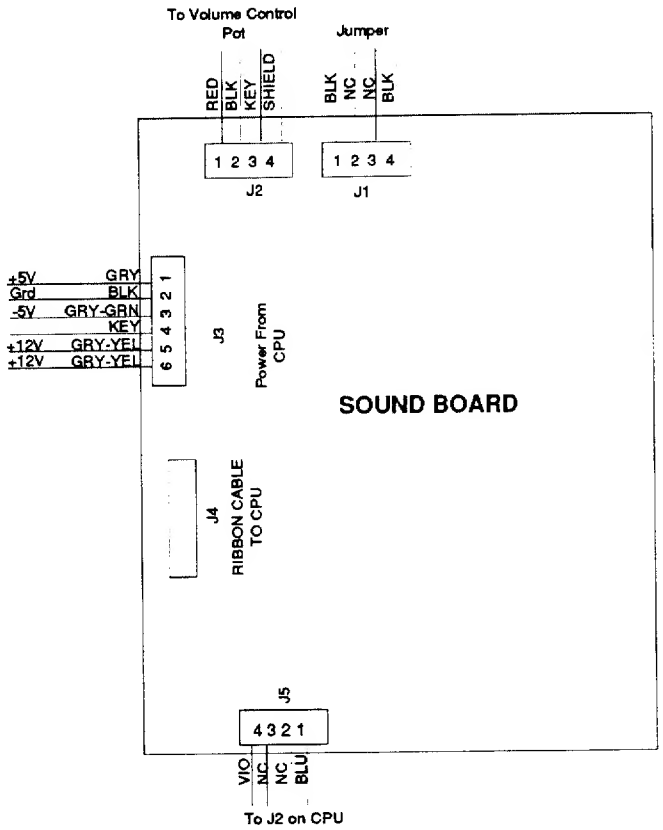

Control Panel Wire Colors

PLAYER ONE

START/CONTINUE

Yellow-Green
Black
Black

MOVE & FIRE

Red
Violet
Orange-Brown
Brown
Black

PLAYER TWO

START/CONTINUE

Yellow-Blue
Black
Black

MOVE & FIRE

Red
Violet
Orange-Brown
Brown
Black

Smash TV Inserted Jumpers

AUDIO BOARD
P/N D-11581-3044

W2
W9
W11

CPU BOARD
P/N C-13234-3044

W2	W29	W47	W66
W8	W31	W48	W68
W11	W32	W50	W69
W12	W34	W52	W71
W14	W36	W55	W73
W21	W39	W57	W75
W22	W41	W58	W77
W24	W42	W60	W80
W27	W45	W62	

WARNINGS & NOTICES

Warning

USE OF NON-WILLIAMS' PARTS OR CIRCUIT MODIFICATIONS MAY CAUSE SERIOUS INJURY OR EQUIPMENT DAMMAGE! USE ONLY WILLIAMS' AUTHORIZED PARTS.

* For safety and reliability, substitute parts and modifications are not recommended.
* Substitute parts or modifications may void FCC type acceptance.
* This game is protected by federal copyright, trademark and patent laws. Unauthorized modifications may be illegal under Federal law. This also applies to WILLIAMS' logos, designs, publications and assemblies. Moreover, facimiles of WILLIAMS' equipment (or any feature thereof) may be illegal under federal law, regardless of whether or not such facimilies are manufactured with WILLIAMS' components.

Warning

This equipment generates, uses and can emit radio frequency energy and, if not installed properly and used according to the directions in this manual, may cause interference to radio communications. It has been tested and found to comply with the limits for a Class A computing device pursuant to Subpart J of part 15 of FCC rules which are designed to provide reasonable protection against such interference when operated in a commercial enviroment. Operation of this equipment in a residential area is likely to cause interference to radio communications, in which the user, at his or her own expense, will be required to take whatever measures may be needed to correct the interference.

Warning

Prevent shock hazard and assure proper game operation. Only plug this game into a properly grounded outlet. Do not use a cheater plug to defeat the power cord's grounding pin. Do not cut off the ground pin.

Notice

No part of this publication may be reproduced by any mechanical , photographic, or electronic process, or in the form of a phonographic recording, nor may be transmited, or otherwise copied for public or private use, without permission from the publisher.

Entire contents of this manual copyright © 1990 WILLIAMS ELECTRONICS GAMES, INC. All rights reserved

WILLIAMS ELECTRONICS GAMES, INC.
3401 N. CALIFORNIA AVE.
CHICAGO, ILLINOIS 60618